ARMY *TM 9-2330-392-13&P
AIR FORCE TO 36A11-5-25-1

TECHNICAL MANUAL
OPERATOR AND FIELD MAINTENANCE MANUAL
INCLUDING REPAIR PARTS AND SPECIAL TOOLS LIST
FOR

TRAILER, CARGO: TWO-WHEEL AND CHASSIS
M1101
NSN 2330-01-387-5443 (EIC CBC)
M1102
NSN 2330-01-387-5426 (EIC CBB)
CHASSIS
NSN 2330-01-387-5424 (EIC CCL)

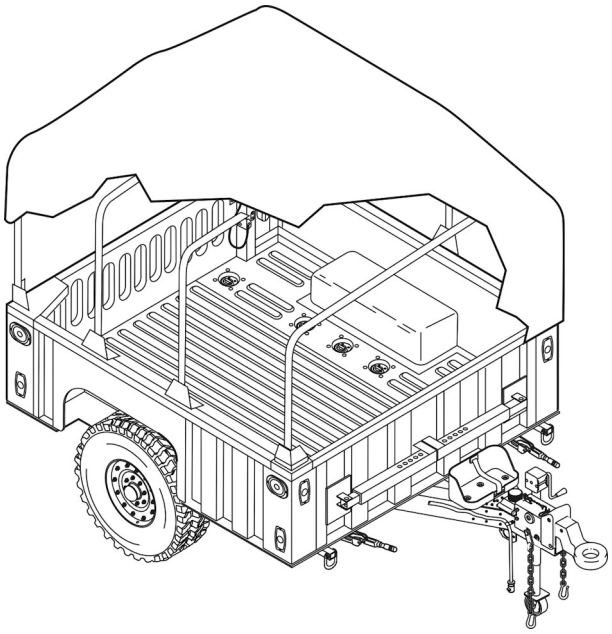

*TM 9-2330-392-13&P dated 07 December 2012 supersedes TM 9-2330-392-14&P dated 01 October 1995, including all changes.

DISTRIBUTION STATEMENT A - Approved for public release, distribution is unlimited.

HEADQUARTERS, DEPARTMENTS OF THE ARMY AND THE AIR FORCE
07 DECEMBER 2012

WARNING SUMMARY

This warning summary contains general safety precautions and instructions that must be understood and applied during the operation and maintenance of the M1101, M1102, and Chassis Trailers to ensure personnel against injury, long-term health hazards, or death. Failure to observe these precautions could result in serious death or injury to personnel. Also included are explanations of safety and hazardous materials icons used within the technical manual.

FOR FIRST AID INFORMATION, REFER TO FM 4-25.11.

EXPLANATION OF SAFETY WARNING ICONS

ELECTRICAL - electrical wire to hand with electricity symbol running through hand shows that shock hazard is present.

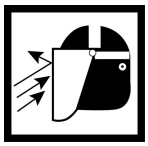

FLYING PARTICLES - arrows bouncing off face shield show that particles flying through the air will harm face.

HEAVY OBJECT - human figure stooping over heavy object shows physical injury potential from improper lifting technique.

HEAVY PARTS - heavy object on human figure shows that heavy parts present a danger to life or limb.

HEAVY PARTS - heavy object pinning human figure against wall shows that heavy, moving parts present a danger to life or limb.

HEAVY PARTS - foot with heavy object on top shows that heavy parts can crush and harm.

HEAVY PARTS - hand with heavy object on top shows that heavy parts can crush and harm.

WARNING SUMMARY - Continued

HOT AREA - hand over object radiating heat shows that part is hot and can burn.

GENERAL SAFETY WARNING DESCRIPTION

WARNING

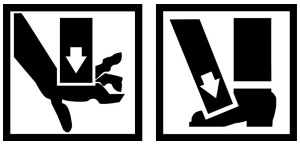

DO NOT move the trailer laterally (push/pull) using the front support leg as a third wheel or trailer dolly. Mounting bracket or front support leg may fail. Failure to comply may result in personnel death or injury, or equipment damage. Seek medical attention in event of injury.

WARNING

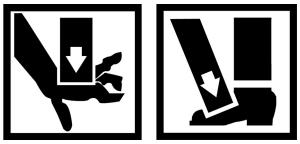

If the trailer is not coupled to the towing vehicle, ensure that the front support leg is down and locked, the parking brakes are applied, the wheels are chocked, and the rear stabilizers are installed. Failure to follow this warning may cause trailer to roll or tilt. Failure to comply may result in personnel death or injury, or equipment damage. Seek medical attention in event of injury.

WARNING SUMMARY - Continued

WARNING

- **Drawbar is heavy – up to 420 lb (190.5 kg) loaded tongue weight. Use front support (landing) leg crank to raise and lower trailer drawbar. If support leg assembly is inoperative, use suitable lifting device to lift the drawbar. If a suitable lifting device is not available, remove load from trailer and use four or more people to lift drawbar. Failure to comply may result in personnel death or injury, or equipment damage. Seek medical attention in event of injury.**
- **Tailgate is heavy – weighs approximately 75 lb (34 kg). Use caution while removing or installing tailgate as it may fall. Failure to comply may result in serious injury to personnel or damage to equipment. Seek medical attention in event of injury.**
- **Tongue weight is 420 lb (191 kg). Provide adequate support and use assistance during procedure. Ensure that any lifting device used is in good condition and of suitable load capacity. Keep clear of heavy parts supported only by lifting device. Failure to comply may result in personnel death or injury. Seek medical attention in event of injury.**
- **Axle handling is normally a two-person task. A third person may be required. The axle weight is 190 lb (86 kg). Use caution when handling the axle. Failure to comply may result in personnel injury or equipment damage. Seek medical attention in event of injury.**
- **Wheel assembly weighs approximately 155 lb (70.31 kg). Two people are required to lift wheel assembly. Failure to comply may result in personnel death or injury. Seek medical attention in event of injury.**

WARNING

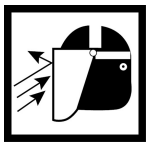

Removing inflated tires could be dangerous to personnel. Removing the outer nuts that hold the rim together while the tire assembly is inflated could result in injury or death. Remove only the inner group of nuts when removing a wheel from the vehicle. Failure to comply may result in personnel death or injury. Seek medical attention in event of injury.

WARNING SUMMARY - Continued

WARNING

Ensure jack is positioned directly under the torsion arm, next to the wheel being worked on. DO NOT place jack at any other location such as frame rails. Failure to comply may result in personnel death or injury, or equipment damage. Seek medical attention in event of injury.

WARNING

When performing maintenance on brake system, ensure that wheels are securely chocked. Failure to comply may cause trailer to roll, resulting in personnel death or injury, or equipment damage. Seek medical attention in event of injury.

EXPLANATION OF HAZARDOUS MATERIALS ICONS

BIOLOGICAL - abstract symbol bug shows that a material may contain bacteria or viruses that present a danger to life or health.

CHEMICAL - drops of liquid on hand shows that the material will cause burns or irritation to human skin or tissue.

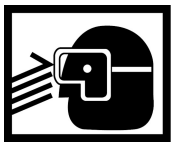

EYE PROTECTION - person with goggles shows that the material will injure the eyes.

FIRE - flame shows that a material may ignite and cause burns.

WARNING SUMMARY - Continued

EXPLANATION OF HAZARDOUS MATERIALS ICONS - Continued

POISON - skull and crossbones shows that a material is poisonous or is a danger to life.

VAPOR - human figure in a cloud shows that material vapors present a danger to life or health.

GENERAL HAZARDOUS MATERIALS WARNING DESCRIPTION

WARNING

Accidental or intentional introduction of liquid contaminants into the environment is a violation of state, federal, and military regulations. Refer to Army Petroleum, Oils, and Lubricants (POL) for information concerning storage, use, and disposal of these liquids. Failure to comply may cause damage to environment and health of personnel. Seek medical attention in the event of an injury.

WARNING SUMMARY - Continued

GENERAL HAZARDOUS MATERIALS WARNING DESCRIPTION - Continued

WARNING

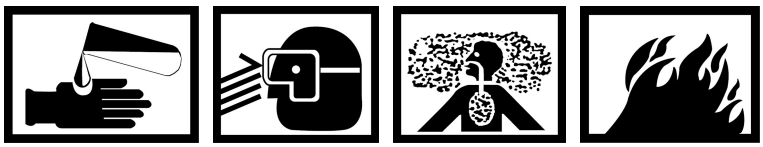

- **Solvent cleaning compound MIL-PRF-680 may be irritating to the eyes and skin. Wear protective gloves and goggles. First aid for skin contact: remove contaminated clothing. Wash skin thoroughly with soap and water. First aid for eye contact: flush with water for 15 minutes or until irritation subsides. If symptoms persist, seek medical attention. Failure to comply may result in personnel death or injury. Seek medical attention in event of injury.**
- **Use solvent cleaning compound MIL-PRF-680 in a well-ventilated area. Use respirator as needed. Accidental ingestion can cause irritation of digestive tract and respiratory tract. May cause lung and central nervous system damage. Can be fatal if swallowed. Inhalation of high/massive concentrations can cause coma or be fatal. First aid for ingestion: DO NOT induce vomiting. Seek immediate medical attention. First aid for inhalation: move to fresh air. If not breathing, provide artificial respiration. If symptoms persist, seek medical attention. Failure to comply may result in personnel death or injury. Seek medical attention in event of injury.**
- **MIL-PRF-680 solvent is combustible; DO NOT use or store near heat, sparks, flame, or other ignition sources. Use mechanical ventilation whenever product is used in a confined space, heated above ambient temperatures, or agitated. Keep container sealed when not in use. Failure to comply may result in personnel death or injury. Seek medical attention in event of injury.**
- **Improper cleaning methods and use of unauthorized cleaning liquids or solvents can injure personnel and damage equipment. Failure to comply may result in personnel death or injury. Seek medical attention in event of injury.**
- **Cloths or rags saturated with solvent cleaning compound must be disposed of in accordance with authorized facility procedures. Failure to comply may result in personnel death or injury. Seek medical attention in event of injury.**

WARNING SUMMARY - Continued

GENERAL HAZARDOUS MATERIALS WARNING DESCRIPTION - Continued

WARNING

DO NOT handle brakeshoes, brakedrums. or other brake components unless area has been properly cleaned. There may be hazardous dust on these components, which can be dangerous if you touch it or breathe it. Wear an approved filter mask and gloves. NEVER use compressed air or a dry brush to clean brake components. Dust may be removed using an industrial-type vacuum cleaner. Clean dust or mud away from brake components with water and a wet, soft brush or cloth. Failure to comply may result in personnel death or injury. Seek medical attention in event of injury.

WARNING

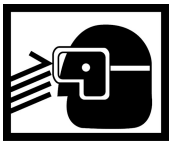

Eye injury may result if brake fluid comes in contact with eyes. Always wear eye protection when working with brake fluid. Failure to comply may result in personnel injury. Seek medical attention in event of injury.

WARNING

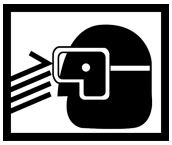

Wear eye protection when driving heads off rivets. Failure to comply may result in eye injury or loss of vision. Seek medical attention in event of injury.

LIST OF EFFECTIVE PAGES/WORK PACKAGES

NOTE: This manual supersedes TM 9-2330-392-14&P dated 01 October 1995, including all changes. Zero in the "Change No." column indicates an original page or work package.

Date of issue for the original manual is:

Original 07 December 2012

TOTAL NUMBER OF PAGES FOR FRONT AND REAR MATTER IS 46 AND TOTAL NUMBER OF WORK PACKAGES IS 96 CONSISTING OF THE FOLLOWING:

Page/WP No.	Change No.	Page/WP No.	Change No.
Front Cover	0	WP 0032 (4 pgs)	0
a-g/h blank	0	WP 0033 (6 pgs)	0
i-xvii/xviii blank	0	WP 0034 (4 pgs)	0
Chapter 1 title page	0	WP 0035 (6 pgs)	0
WP 0001 (4 pgs)	0	WP 0036 (6 pgs)	0
WP 0002 (12 pgs)	0	WP 0037 (4 pgs)	0
WP 0003 (4 pgs)	0	WP 0038 (20 pgs)	0
Chapter 2 title page	0	WP 0039 (4 pgs)	0
WP 0004 (2 pgs)	0	WP 0040 (2 pgs)	0
WP 0005 (10 pgs)	0	WP 0041 (4 pgs)	0
WP 0006 (4 pgs)	0	WP 0042 (10 pgs)	0
WP 0007 (4 pgs)	0	WP 0043 (4 pgs)	0
WP 0008 (10 pgs)	0	WP 0044 (4 pgs)	0
Chapter 3 title page	0	WP 0045 (8 pgs)	0
WP 0009 (2 pgs)	0	WP 0046 (8 pgs)	0
WP 0010 (2 pgs)	0	WP 0047 (2 pgs)	0
WP 0011 (2 pgs)	0	WP 0048 (4 pgs)	0
WP 0012 (2 pgs)	0	WP 0049 (8 pgs)	0
WP 0013 (2 pgs)	0	WP 0050 (6 pgs)	0
WP 0014 (2 pgs)	0	WP 0051 (2 pgs)	0
WP 0015 (2 pgs)	0	WP 0052 (2 pgs)	0
WP 0016 (2 pgs)	0	WP 0053 (4 pgs)	0
WP 0017 (2 pgs)	0	WP 0054 (2 pgs)	0
WP 0018 (4 pgs)	0	WP 0055 (2 pgs)	0
WP 0019 (2 pgs)	0	WP 0056 (2 pgs)	0
WP 0020 (2 pgs)	0	WP 0057 (8 pgs)	0
WP 0021 (2 pgs)	0	WP 0058 (4 pgs)	0
Chapter 4 title page	0	WP 0059 (4 pgs)	0
WP 0022 (2 pgs)	0	WP 0060 (4 pgs)	0
WP 0023 (4 pgs)	0	WP 0061 (4 pgs)	0
Chapter 5 title page	0	WP 0062 (2 pgs)	0
WP 0024 (4 pgs)	0	WP 0063 (6 pgs)	0
WP 0025 (4 pgs)	0	WP 0064 (6 pgs)	0
Chapter 6 title page	0	WP 0065 (2 pgs)	0
WP 0026 (4 pgs)	0	WP 0066 (6 pgs)	0
WP 0027 (6 pgs)	0	WP 0067 (2 pgs)	0
WP 0028 (4 pgs)	0	Chapter 7 title page	0
WP 0029 (8 pgs)	0	WP 0068 (8 pgs)	0
WP 0030 (6 pgs)	0	WP 0069 (4 pgs)	0
WP 0031 (6 pgs)	0		

LIST OF EFFECTIVE PAGES/WORK PACKAGES - Continued

Page/WP No.	Change No.	Page/WP No.	Change No.
WP 0070 (4 pgs)	0	WP 0085 (4 pgs)	0
WP 0071 (6 pgs)	0	WP 0086 (4 pgs)	0
WP 0072 (4 pgs)	0	WP 0087 (2 pgs)	0
WP 0073 (4 pgs)	0	WP 0088 (4 pgs)	0
WP 0074 (4 pgs)	0	WP 0089 (4 pgs)	0
WP 0075 (4 pgs)	0	Chapter 8 title page (2 pgs)	0
WP 0076 (4 pgs)	0	WP 0090 (2 pgs)	0
WP 0077 (4 pgs)	0	WP 0091 (4 pgs)	0
WP 0078 (4 pgs)	0	WP 0092 (4 pgs)	0
WP 0079 (4 pgs)	0	WP 0093 (2 pgs)	0
WP 0080 (4 pgs)	0	WP 0094 (4 pgs)	0
WP 0081 (4 pgs)	0	WP 0095 (4 pgs)	0
WP 0082 (4 pgs)	0	WP 0096 (2 pgs)	0
WP 0083 (6 pgs)	0	Index-1 -- Index-3/4 blank	0
WP 0084 (6 pgs)	0	Back Cover	0

HEADQUARTERS
DEPARTMENTS OF THE ARMY
AND THE AIR FORCE
WASHINGTON, D.C., 07 DECEMBER 2012

TECHNICAL MANUAL

OPERATOR AND FIELD MAINTENANCE MANUAL INCLUDING REPAIR PARTS AND SPECIAL TOOLS LISTS FOR TRAILER, CARGO: TWO-WHEEL AND CHASSIS

M1101
NSN 2330-01-387-5443 (EIC CBC)
M1102
NSN 2330-01-387-5426 (EIC CBB)
CHASSIS
NSN 2330-01-387-5424 (EIC CCL)

REPORTING ERRORS AND RECOMMENDING IMPROVEMENTS

You can help improve this publication. If you find any errors, or if you would like to recommend any improvements to the procedures in this publication, please let us know. Service should be submitted as follows: (A) Army - Mail your DA Form 2028 (Recommended Changes to Publications and Blank Forms) through the internet on the TACOM Unique Logistics Support Applications (TULSA) Web site. The Internet address is https://tulsa.tacom.army.mil. Access to all applications requires CAC authentication, and you must complete the Access Request form the first time you use it. The DA Form 2028 is located under the TULSA Applications on the left-hand navigation bar. Fill out the form and click on SUBMIT. Using this form on the TULSA Web site will enable us to respond more quickly to your comments and to better manage the DA Form 2028 program. You may also mail, e-mail, or fax your comments or DA Form 2028 directly to the U.S. Army TACOM Life Cycle Management Command. The postal mail address is U.S. Army TACOM Life Cycle Management Command, ATTN: AMSTA-LCL-MPP/TECH PUBS, MS 727, 6501 E. 11 Mile Road, Warren, MI 48397-5000. The e-mail address is tacomlcmc.daform2028@us.army.mil. The fax number is DSN 786-1856 or Commercial (586) 282-1856. (F) Air Force - For users without access to JCALS, submit AFTO Form 22 directly to WR/ALC/GRVEB, Robins AFB GA. Send in your recommended changes via electronic mail. Our e-mail address is robins.ce.afto22@robins.af.mil.

*TM 9-2330-392-13&P dated 07 December 2012 supersedes TM 9-2330-392-14&P dated 01 October 1995, including all changes.

DISTRIBUTION STATEMENT A - Approved for public release; distribution is unlimited.

TABLE OF CONTENTS

Page No.
WP Sequence No.

HOW TO USE THIS MANUAL xv

Chapter 1 - GENERAL INFORMATION, EQUIPMENT DESCRIPTION, AND THEORY OF OPERATION

GENERAL INFORMATION..... WP 0001

EQUIPMENT DESCRIPTION AND DATA..... WP 0002

Table 1. Maximum Towing Speeds With Maximum Payload..... 0002-1

Figure 1. Trailer Chassis..... 0002-2

Table 2. Components and Description..... 0002-2

Figure 2. Trailer Chassis – Breakaway Cable Through Axle..... 0002-3

Table 3. Components and Description..... 0002-3

Figure 3. Trailer Chassis – Tailgate Through Reflectors..... 0002-4

Table 4. Components and Description..... 0002-4

Figure 4. M1101 Cargo Trailer..... 0002-5

Figure 5. M1102 Cargo Trailer..... 0002-6

Figure 6. Trailer Chassis..... 0002-7

Table 5. Differences Between Models..... 0002-8

Table 6. Equipment Data..... 0002-10

THEORY OF OPERATION..... WP 0003

Figure 1. Hydraulic Brake System..... 0003-3

Figure 2. Handbrakes..... 0003-4

Chapter 2 - OPERATOR MAINTENANCE INSTRUCTIONS

DESCRIPTION AND USE OF OPERATOR CONTROLS AND INDICATORS..... WP 0004

Table 1. Operator Controls and Indicators..... 0004-2

Figure 1. Controls and Indicators..... 0004-2

OPERATION UNDER USUAL CONDITIONS..... WP 0005

Figure 1. Chock Block Placement on Level Surface With Neither Side of Trailer Raised..... 0005-1

Figure 2. Chock Block Placement on Level Surface With One Side of Trailer Raised..... 0005-2

Figure 3. Chock Block Placement on Incline With Front of Trailer Facing Uphill..... 0005-2

TABLE OF CONTENTS - Continued

Page No.
WP Sequence No.

Figure 4. Chock Block Placement on Incline With Front of Trailer Facing Downhill..... 0005-2

Figure 5. Load Distributed Evenly Over Trailer..... 0005-4

Figure 6. Safety Pin Removed From Pintle Hitch..... 0005-5

Figure 7. Trailer Coupled to Towing Vehicle..... 0005-6

Figure 8. Breakaway Cable Attached to Towing Vehicle..... 0005-7

OPERATION UNDER UNUSUAL CONDITIONS..... WP 0006

WHEEL AND TIRE ASSEMBLY REPLACEMENT (OLD JACK)..... WP 0007

Figure 1. Wheel and Tire Assembly Removal and Installation..... 0007-3

WHEEL AND TIRE ASSEMBLY REPLACEMENT (NEW JACK)..... WP 0008

Figure 1. HMMWV Jack and Saddle..... 0008-2

Figure 2. Trailer Jack Adapter..... 0008-3

Figure 3. Pump Unit Hydraulic Hose Quick-Disconnect..... 0008-3

Figure 4. Jack Positioning..... 0008-5

Figure 5. Wheel Assembly Removal..... 0008-6

Figure 6. Wheel Assembly Installation..... 0008-7

Figure 7. Jack Removal..... 0008-8

Figure 8. Lug Nut Tightening Sequence..... 0008-9

Chapter 3 - TROUBLESHOOTING PROCEDURES

OPERATOR TROUBLESHOOTING SYMPTOM INDEX..... WP 0009

FIELD TROUBLESHOOTING SYMPTOM INDEX..... WP 0010

OPERATOR TROUBLESHOOTING – ELECTRICAL..... WP 0011

OPERATOR TROUBLESHOOTING – BRAKES..... WP 0012

OPERATOR TROUBLESHOOTING – WHEELS AND TIRES..... WP 0013

OPERATOR TROUBLESHOOTING – FRONT SUPPORT LEG..... WP 0014

OPERATOR TROUBLESHOOTING – SUSPENSION..... WP 0015

FIELD TROUBLESHOOTING – ELECTRICAL..... WP 0016

FIELD TROUBLESHOOTING – AXLE..... WP 0017

TABLE OF CONTENTS - Continued

Page No.
WP Sequence No.

FIELD TROUBLESHOOTING – BRAKES..... WP 0018

FIELD TROUBLESHOOTING – WHEELS AND TIRES..... WP 0019

FIELD TROUBLESHOOTING – FRONT SUPPORT LEG AND CASTER..... WP 0020

FIELD TROUBLESHOOTING – SUSPENSION..... WP 0021

Chapter 4 - OPERATOR PMCS INSTRUCTIONS

OPERATOR/CREW PREVENTIVE MAINTENANCE CHECKS AND SERVICES (PMCS) INTRODUCTION..... WP 0022

OPERATOR PREVENTIVE MAINTENANCE CHECKS AND SERVICES (PMCS)..... WP 0023

Table 1. Operator Preventive Maintenance Checks and Services (PMCS)..... 0023-1

Figure 1. Spring Clip..... 0023-2

Chapter 5 - FIELD PMCS INSTRUCTIONS

FIELD PREVENTIVE MAINTENANCE CHECKS AND SERVICES (PMCS) INTRODUCTION..... WP 0024

FIELD PREVENTIVE MAINTENANCE CHECKS AND SERVICES (PMCS)..... WP 0025

Table 1. Field Preventive Maintenance Checks and Services (PMCS)..... 0025-1

Figure 1. Tire..... 0025-2

Figure 2. Axle Mounting..... 0025-3

Chapter 6 - FIELD MAINTENANCE INSTRUCTIONS

SERVICE UPON RECEIPT..... WP 0026

GENERAL MAINTENANCE INSTRUCTIONS..... WP 0027

WIRING HARNESS CLIP REPLACEMENT..... WP 0028

Figure 1. Wiring Harness Clip Removal and Installation..... 0028-3

TAILLIGHT MAINTENANCE..... WP 0029

Figure 1. Lamp Bulb/LED Replacement..... 0029-3

Figure 2. Taillight with Bulb Removal and Installation..... 0029-5

Figure 3. Taillight with LED Removal and Installation..... 0029-6

FRONT AND SIDE MARKER LIGHTS MAINTENANCE..... WP 0030

Figure 1. Lamp Bulb Replacement..... 0030-2

Figure 2. Lamp Assembly with Bulb Removal..... 0030-3

TABLE OF CONTENTS - Continued

Page No.
WP Sequence No.

Figure 3. Lamp Assembly with Bulb Installation..... 0030-4

Figure 4. Lamp Assembly with LED Removal and Installation..... 0030-5

REAR MARKER LIGHTS MAINTENANCE..... WP 0031

Figure 1. Marker Light Assembly View From Back Side and Rear of Vehicle..... 0031-3

Figure 2. Lamp Assembly with LED Removal and Installation..... 0031-5

BRANCHED WIRING HARNESS REPLACEMENT..... WP 0032

Figure 1. Branched Wiring Harness Removal and Installation..... 0032-3

BRANCHED WIRING HARNESS REPAIR..... WP 0033

Figure 1. Typical Panel Mounting Receptacle Replacement..... 0033-2

Figure 2. Typical Plug Replacement..... 0033-3

Figure 3. Terminal-Type Cable Connector Replacement..... 0033-4

Figure 4. Male Cable Connector Replacement..... 0033-4

Figure 5. Female Cable Connector (With Washer) Replacement..... 0033-5

Figure 6. Female Cable Connector (With Sleeve) Replacement..... 0033-5

INTERVEHICULAR CABLE REPLACEMENT..... WP 0034

Figure 1. Intervehicular Cable Removal and Installation..... 0034-3

AXLE ASSEMBLY INSPECTION AND REPLACEMENT..... WP 0035

Figure 1. Axle Assembly Inspection..... 0035-2

Figure 2. Axle Assembly Removal and Installation..... 0035-5

HANDBRAKE LEVER REPLACEMENT..... WP 0036

Figure 1. Handbrake Lever Removal..... 0036-2

Figure 2. Handbrake Lever Cleaning and Inspection..... 0036-4

Figure 3. Handbrake Lever Installation..... 0036-5

Figure 4. Handbrake Lever Engaged/Disengaged..... 0036-6

HANDBRAKE CABLE AND SHEATH REPLACEMENT..... WP 0037

Figure 1. Handbrake Cable and Sheath Removal and Installation..... 0037-3

SERVICE BRAKE MAINTENANCE..... WP 0038

TABLE OF CONTENTS - Continued

	Page No. WP Sequence No.
Figure 1. Brakeshoe Inspection	0038-2
Figure 2. Brakedrum Inspection	0038-3
Figure 3. Front/Rear Shoe Spring Removal	0038-4
Figure 4. Brakeshoe Retainer Removal	0038-5
Figure 5. Brake Adjuster Removal	0038-5
Figure 6. Service Brakeshoe Disassembly	0038-6
Figure 7. Backing Plate Removal	0038-8
Figure 8. Backing Plate Installation	0038-9
Figure 9. Service Brakeshoe Assembly	0038-11
Figure 10. Brake Adjuster Installation	0038-11
Figure 11. Brakeshoe Retainer Installation	0038-12
Figure 12. Front/Rear Shoe Spring Installation	0038-13
Figure 13. Service Brake Adjustment	0038-15
Table 1. Torque Measurements	0038-16
Figure 14. Service Brake Adjustment	0038-17
Figure 15. Jack Placement	0038-19
WHEEL CYLINDER REPLACEMENT	WP 0039
Figure 1. Wheel Cylinder Removal	0039-2
Figure 2. Wheel Cylinder Installation	0039-4
BREAKAWAY LEVER AND LEAF SPRING REPLACEMENT	WP 0040
Figure 1. Breakaway Lever and Leaf Spring Removal and Installation	0040-2
HYDRAULIC BRAKE SYSTEM BLEEDING	WP 0041
Figure 1. Hydraulic Brake System Bleeding	0041-3
HYDRAULIC BRAKE ACTUATOR REPLACEMENT	WP 0042
Figure 1. Hydraulic Brake Actuator Removal	0042-2
Figure 2. Hydraulic Brake Actuator Disassembly	0042-3
Figure 3. Hydraulic Brake Actuator Disassembly	0042-4

TABLE OF CONTENTS - Continued

Page No.
WP Sequence No.

Figure 4. Hydraulic Brake Actuator Cleaning and Inspection..... 0042-6

Figure 5. Hydraulic Brake Actuator Assembly..... 0042-7

Figure 6. Hydraulic Brake Actuator Assembly..... 0042-8

Figure 7. Hydraulic Brake Actuator Installation..... 0042-9

LUNETTE REPLACEMENT..... WP 0043

Figure 1. Lunette Removal..... 0043-2

Figure 2. Lunette Installation..... 0043-4

MASTER CYLINDER REPLACEMENT..... WP 0044

Figure 1. Master Cylinder Removal and Installation..... 0044-3

HYDRAULIC BRAKE LINES REPLACEMENT..... WP 0045

Figure 1. Front Flex Brake Line Removal and Installation..... 0045-2

Figure 2. Front Solid Brake Line Removal and Installation..... 0045-3

Figure 3. Rear Flex Brake Line Removal and Installation..... 0045-5

Figure 4. Rear Solid Brake Line Removal and Installation..... 0045-7

HUB/DRUM, RACE, AND BEARING SEAL MAINTENANCE..... WP 0046

Figure 1. Hub/Drum, Race, and Bearing Seal Removal..... 0046-2

Figure 2. Hub/Drum, Race, and Bearing Seal Disassembly..... 0046-3

Figure 3. Hub/Drum, Race, and Bearing Seal Cleaning and Inspection..... 0046-5

Figure 4. Hub/Drum, Race, and Bearing Seal Assembly..... 0046-6

Figure 5. Hub/Drum, Race, and Bearing Seal Installation..... 0046-7

WHEEL AND TIRE ASSEMBLY REPAIR..... WP 0047

SAFETY CHAIN REPLACEMENT..... WP 0048

Figure 1. Safety Chain Removal and Installation..... 0048-3

FRONT SUPPORT LEG AND PIVOT REPAIR..... WP 0049

Figure 1. Front Support Leg Removal..... 0049-2

Figure 2. Caster Removal..... 0049-3

Figure 3. Pivot Removal and Installation..... 0049-5

TABLE OF CONTENTS - Continued

Page No.
WP Sequence No.

Figure 4. Caster Installation..... 0049-6

Figure 5. Front Support Leg Installation..... 0049-7

SHOCK ABSORBER MAINTENANCE..... WP 0050

Figure 1. Shock Absorber Disassembly..... 0050-2

Figure 2. Shock Absorber Removal..... 0050-3

Figure 3. Shock Absorber Mount Bracket Removal and Installation..... 0050-4

Figure 4. Shock Absorber Assembly..... 0050-5

Figure 5. Shock Absorber Installation..... 0050-6

TAILGATE REPLACEMENT..... WP 0051

Figure 1. Tailgate Removal and Installation..... 0051-2

TAILGATE LANYARD AND MOUNT REPLACEMENT..... WP 0052

Figure 1. Tailgate Lanyard and Mount Removal and Installation..... 0052-2

TAILGATE LATCH ASSEMBLY, LATCH ASSEMBLY PIN, AND LATCHING PIN LANYARD REPLACEMENT..... WP 0053

Figure 1. Tailgate Latch Assembly and Latch Assembly Pin Removal and Installation..... 0053-3

Figure 2. Tailgate Latching Pin Lanyard Removal and Installation..... 0053-4

CARGO TIEDOWN REPLACEMENT..... WP 0054

Figure 1. Cargo Tiedown Removal and Installation..... 0054-2

SHACKLE REPLACEMENT..... WP 0055

Figure 1. Shackle Removal and Installation..... 0055-2

TAILGATE HINGE AND SHIM REPLACEMENT..... WP 0056

Figure 1. Tailgate Hinge Removal and Installation..... 0056-2

CARGO BODY MAINTENANCE..... WP 0057

Figure 1. Rivet Pattern..... 0057-2

Figure 2. Rivet Spacing..... 0057-3

Figure 3. Rivet Loading..... 0057-4

Figure 4. Bolts Replacing Rivets Loaded in Tension..... 0057-4

Table 1. Stop-Drill Sizes for Negligible Cracks..... 0057-5

TABLE OF CONTENTS - Continued

Page No.
WP Sequence No.

Figure 5. Repair by Patching..... 0057-6

Figure 6. Repair by Insertion..... 0057-7

REFLECTOR AND TIEDOWN LOOP REPLACEMENT..... WP 0058

Figure 1. Reflector and Tiedown Loop Removal and Installation..... 0058-3

DECONTAMINATION BRACKET MAINTENANCE..... WP 0059

Figure 1. Decontamination Bracket Removal and Installation..... 0059-3

DATA PLATE AND SHIPPING PLATE REPLACEMENT..... WP 0060

Figure 1. Data Plate Removal and Installation..... 0060-2

Figure 2. Shipping Plate Removal and Installation..... 0060-3

SOFT TOP KIT..... WP 0061

Figure 1. Soft Top Kit Removal and Installation..... 0061-3

PAINTING AND IDENTIFICATION MARKING..... WP 0062

PREPARATION FOR STORAGE OR SHIPMENT..... WP 0063

Table 1. Scheduled Services..... 0063-4

LUBRICATION INSTRUCTIONS..... WP 0064

Table 1. Lubrication Chart..... 0064-3

ILLUSTRATED LIST OF MANUFACTURED ITEMS..... WP 0065

Table 1. Manufacturing Instructions..... 0065-1

TORQUE LIMITS..... WP 0066

Table 1. Metal Fasteners..... 0066-1

Figure 1. Torque Wrench Formulas..... 0066-2

Figure 2. Torque Wrench Adapter Setups..... 0066-2

Table 2. M1101, M1102, and Chassis Torque Values..... 0066-3

Table 3. Torque Limits – SAE Fasteners..... 0066-4

Table 4. Torque Limits – Metric Fasteners..... 0066-5

Table 5. Thread Classes..... 0066-5

Figure 3. Thread Description..... 0066-6

TABLE OF CONTENTS - Continued

Page No.
WP Sequence No.

Figure 4. Bolt and Nut Description..... 0066-6

WIRING DIAGRAMS..... WP 0067

Table 1. Trailer Lighting Configuration..... 0067-1

Figure 1. Wiring Diagram..... 0067-2

Chapter 7 - PARTS INFORMATION

REPAIR PARTS AND SPECIAL TOOLS LIST INTRODUCTION..... WP 0068

Table 1. SMR Code Explanation..... 0068-1

GROUP 0608 MISCELLANEOUS ITEMS..... WP 0069

Figure 1. Wiring Harness Clip..... 0069-2

GROUP 0609 LIGHTS..... WP 0070

Figure 2. Tail Lights..... 0070-2

GROUP 0609 LIGHTS..... WP 0071

Figure 3. Clearance Lights (Sheet 1 of 3)..... 0071-2

Figure 3. Clearance Lights (Sheet 2 of 3)..... 0071-3

Figure 3. Clearance Lights (Sheet 3 of 3)..... 0071-4

GROUP 0613 HULL OR CHASSIS WIRING HARNESS..... WP 0072

Figure 4. Wiring Harness, Branched..... 0072-2

GROUP 1000 FRONT AXLE ASSEMBLY..... WP 0073

Figure 5. Axle Assembly..... 0073-2

GROUP 1201 HAND BRAKES..... WP 0074

Figure 6. Handbrakes..... 0074-2

GROUP 1202 SERVICE BRAKES..... WP 0075

Figure 7. Service Brakes..... 0075-2

GROUP 1204 HYDRAULIC BRAKE SYSTEM..... WP 0076

Figure 8. Brake Actuator Assembly (Sheet 1 of 2)..... 0076-1

Figure 8. Brake Actuator Assembly (Sheet 2 of 2)..... 0076-2

GROUP 1311 WHEEL ASSEMBLY..... WP 0077

TABLE OF CONTENTS - Continued

	Page No. WP Sequence No.
Figure 9. Brake Drum	0077-2
GROUP 1311 WHEEL ASSEMBLY	WP 0078
Figure 10. Wheel and Runflat Assembly	0078-2
GROUP 1313 TIRES, TUBES, TIRE CHAINS	WP 0079
Figure 11. Tires	0079-2
GROUP 1503 PINTLES AND TOWING ATTACHMENTS	WP 0080
Figure 12. Safety Chains	0080-2
GROUP 1507 LANDING GEAR, LEVELING JACKS (MECHANICAL OR HYDRAULIC)	WP 0081
Figure 13. Landing Gear and Leveling Jacks	0081-2
GROUP 1604 SHOCK ABSORBER EQUIPMENT	WP 0082
Figure 14. Shock Absorbers	0082-2
GROUP 1810 CARGO BODY	WP 0083
Figure 15. Tailgate, Tiedowns, and Front Support (Sheet 1 of 4)	0083-1
Figure 15. Tailgate, Tiedowns, and Front Support (Sheet 2 of 4)	0083-2
Figure 15. Tailgate, Tiedowns, and Front Support (Sheet 3 of 4)	0083-3
Figure 15. Tailgate, Tiedowns, and Front Support (Sheet 4 of 4)	0083-4
GROUP 2202 ACCESSORY ITEMS	WP 0084
Figure 16. Accessory Items (Sheet 1 of 3)	0084-2
Figure 16. Accessory Items (Sheet 2 of 3)	0084-3
Figure 16. Accessory Items (Sheet 3 of 3)	0084-4
GROUP 2210 DATA PLATES AND INSTRUCTION HOLDERS	WP 0085
Figure 17. Data Plates	0085-2
GROUP 9401 REPAIR KITS	WP 0086
Figure KITS	0086-2
GROUP 9501 HARDWARE SUPPLIES AND BULK MATERIEL, COMMON	WP 0087
NATIONAL STOCK NUMBER (NSN) INDEX	WP 0088
PART NUMBER (P/N) INDEX	WP 0089

TABLE OF CONTENTS - Continued

Page No.
WP Sequence No.

Chapter 8 - SUPPORTING INFORMATION

REFERENCES..... WP 0090

MAINTENANCE ALLOCATION CHART (MAC) INTRODUCTION..... WP 0091

MAINTENANCE ALLOCATION CHART (MAC)..... WP 0092

Table 1. MAC for Trailer, Cargo: Light, Two-Wheel M1101; Trailer, Cargo: Heavy, Two-Wheel M1102 Chassis, Trailer: Two-Wheel..... 0092-1

Table 2. Tools and Test Equipment Requirements..... 0092-4

Table 3. Remarks..... 0092-4

COMPONENTS OF END ITEM (COEI) AND BASIC ISSUE ITEMS (BII) LISTS..... WP 0093

Table 1. Components of End Item (COEI) List..... 0093-2

Table 2. Basic Issue Items (BII) List..... 0093-2

ADDITIONAL AUTHORIZATION LIST (AAL)..... WP 0094

Table 1. Additional Authorization List (AAL)..... 0094-2

EXPENDABLE AND DURABLE ITEMS LIST..... WP 0095

Table 1. Expendable and Durable Items List..... 0095-2

TOOL IDENTIFICATION LIST..... WP 0096

Table 1. Tool Identification List..... 0096-1

Index

HOW TO USE THIS MANUAL

SCOPE

This manual provides you with the information you will need to operate and maintain the Two-Wheel M1101, M1102, and Chassis Trailers.

MANUAL CONTENT

The front matter in this manual consists of general warnings, title block page, and table of contents.

The information contained in this manual is presented in eight chapters. Each chapter is divided into Work Packages (WP) that cover operating procedures, maintenance procedures, troubleshooting procedures, and other information for specific systems or components. Each work package starts on a right-hand page. Page numbers consist of the WP number followed by a dash and another number. For example, "0008-9" means WP 0008, page 9.

The end of this manual contains an alphabetical index, DA Form 2028, and metric conversion chart.

FRONT MATTER

The "Warning Summary" starts on the first right-hand page immediately after the cover and should be read before performing any maintenance on the Two-Wheel M1101, M1102, and Chassis Trailers.

The title block page includes the reporting of errors and recommending improvements statement.

The Table of Contents lists the chapters, figures, tasks, and work packages in this manual.

CHAPTERS

Chapter 1 provides General Information, Equipment Description and Data, and Theory of Operation.

Chapter 2 provides Operator Maintenance Instructions, including Description and Use of Operator Controls and Indicators, Operation Under Usual and Unusual Conditions, and Wheel and Tire Assembly Replacement.

Chapter 3 provides Troubleshooting Procedures.

Chapter 4 provides Operator PMCS Maintenance Instructions.

Chapter 5 provides Field PMCS Maintenance Instructions.

Chapter 6 provides Field Maintenance Instructions.

Chapter 7 provides Parts Information (RPSTL).

Chapter 8 provides Supporting Information, including the titles of documents and publications referenced in this manual (References), Maintenance Allocation Chart (MAC) Introduction, MAC, Components of End Item (COEI) and Basic Issue Items (BII) lists, Additional Authorization List (AAL), Expendable and Durable Items List, and Tool Identification List.

ALPHABETICAL INDEX

An index is located after the last work package in this manual and provides an alphabetical listing of work packages contained in this manual.

HOW TO USE THIS MANUAL - Continued

DA FORM 2028 OR DA FORM 2028-E

DA Form 2028 or DA Form 2028-E is used to report errors and to recommend improvements for the tasks in this manual.

METRIC CONVERSION CHART

The metric conversion chart converts English measurements to Metric equivalents. Measurements in this manual are provided in both English and Metric units.

WARNINGS, CAUTIONS, AND NOTES

You must read and understand this manual ***BEFORE*** operating the Two-Wheel M1101, M1102, and Chassis Trailers.

Throughout this manual you will see **WARNING**, **CAUTION**, and **NOTE** headings. There are good reasons for every one of the following headings:

WARNING

A **WARNING** is used to alert the user to hazardous operating and maintenance procedures, practices, or conditions that could result in death or injury. Warnings must be strictly observed.

CAUTION

A **CAUTION** is used to alert the user to hazardous operating and maintenance procedures, practices, or conditions that could result in damage to or destruction of equipment or mission effectiveness. Cautions must be strictly observed.

NOTE

A **NOTE** highlights an essential operating or maintenance procedure, condition, or statement.

For tasks, warnings and cautions shall follow the title of the associated task; for procedures, they shall follow the title of the associated procedure; for steps, they shall precede the associated step. It is important to read and thoroughly understand the warnings and/or cautions before beginning maintenance. Notes may precede or follow the steps to which they pertain, depending on what makes the most sense.

INITIAL SETUP

Before starting a task, you must obtain all the tools, supplies, and personnel listed in the initial setup. Be sure to read the task before performing the maintenance. If any other tasks are referenced, you must go to the initial setup page for each of those tasks to find out what tools, supplies, and personnel will be needed.

HOW TO USE THIS MANUAL - Continued

INDEXING

Two indexing procedures are used in this manual to help you locate information quickly:

- Table of Contents.
- Alphabetical index at the back of this manual.

CHAPTER 1

GENERAL INFORMATION, EQUIPMENT DESCRIPTION, AND THEORY OF OPERATION

OPERATOR MAINTENANCE
GENERAL INFORMATION

SCOPE

1. Type of Manual: Operator and Field Maintenance Manual Including Repair Parts and Special Tools List
2. Model Numbers and Equipment Names:
   - Trailer, Cargo, Two-Wheel: Light, M1101
   - Trailer, Cargo, Two-Wheel: Heavy, M1102
   - Chassis, Trailer, Two-Wheel
3. Purpose of Equipment: Used to carry payloads over primary, secondary, or cross-country roads.
   - M1101 Cargo Trailer – High Mobility Multipurpose Wheeled Vehicle (HMMWV) M998/M1038 Series or HMMWV M1097/M1114 Series
   - M1102 Cargo Trailer – HMMWV M1097/M1114 Series

NOTE

The model of vehicle allowed to pull this trailer is dependent on the weight of the installed equipment.

   - Trailer Chassis – HMMWV M998/M1038 Series or HMMWV M1097/M1114 Series
4. Location Terms: Throughout this manual, the terms "front," "rear," "curbside," and "roadside" are used to describe views of the trailer. The trailer drawbar is located at front of the trailer. The stoplights and tailights are at the rear. As viewed from the rear, "curbside" is the right side and "roadside" is the left side.

MAINTENANCE FORMS, RECORDS, AND REPORTS

(A) Department of the Army forms and procedures used for equipment maintenance will be those prescribed by (as applicable) DA PAM 750-8, The Army Maintenance Management System (TAMMS) Users Manual; DA PAM 738-751, Functional Users Manual for the Army Maintenance Management Systems - Aviation (TAMMS-A); or AR 700-138, Army Logistics Readiness and Sustainability.
(F) Department of the Air Force forms and procedures used for equipment maintenance will be those prescribed by (as applicable) AFI 21-101 and TO 00-20 Series Technical Orders.

REPORTING EQUIPMENT IMPROVEMENT RECOMMENDATIONS (EIR)

If your trailer needs improvement, let us know. Send us an EIR. You, the user, are the only one who can tell us what you do not like about your equipment. Let us know why you do not like the design or performance.

All non-Aviation/Missile EIRs and PQDRs must be submitted through the Product Data Reporting and Evaluation Program (PDREP) Web site. The PDREP site is: https://www.pdrep.csd.disa.mil/.

If you do not have Internet access, you may submit your information using an SF 368 (Product Quality Deficiency Report). You can send your SF 368 using email, regular mail, or fax using the addresses/fax numbers specified in DA PAM 750-8, The Army Maintenance Management System (TAMMS) Users Manual. We will send you a reply.

CORROSION PREVENTION AND CONTROL (CPC)

Corrosion Prevention and Control (CPC) of Army materiel is a continuing concern. It is important that any corrosion problems with this item be reported so that the problem can be corrected and improvements can be made to prevent the problem in future items.

Corrosion specifically occurs with metals. It is an electrochemical process that causes the degradation of metals. It is commonly caused by exposure to moisture, acids, bases, or salts. An example is the rusting of iron. Corrosion damage in metals can be seen, depending on the metal, as tarnishing, pitting, fogging, surface residue, and/or cracking.

CORROSION PREVENTION AND CONTROL (CPC) - Continued

Plastics, composites, and rubbers can also degrade. Degradation is caused by thermal (heat), oxidation (oxygen), solvation (solvents), or photolytic (light, typically UV) processes. The most common exposures are excessive heat or light. Damage from these processes will appear as cracking, softening, swelling, and/or breaking.

SF 368, Product Quality Deficiency Report should be submitted to the address specified in DA PAM 750-8, The Army Maintenance Management System (TAMMS) Users Manual.

DESTRUCTION OF ARMY MATERIEL TO PREVENT ENEMY USE

Refer to TM 750-244-6, Procedures for Destruction of Tank-Automotive Equipment to Prevent Enemy Use (US Army Tank-Automotive Command).

WARRANTY INFORMATION

No warranty.

COMMON TOOLS AND EQUIPMENT

For authorized common tools and equipment, refer to the Modified Table of Organization and Equipment (MTOE) applicable to your unit.

SPECIAL TOOLS; TEST, MEASUREMENT, AND DIAGNOSTIC EQUIPMENT (TMDE); AND SUPPORT EQUIPMENT

No special tools, TMDE, or support equipment is required to maintain the trailers.

REPAIR PARTS

Repair parts are listed and illustrated in (WP 0069) through (WP 0087) of this manual.

LIST OF ABBREVIATIONS / ACRONYMS

Abbreviation/Acronym	Name
°C	Degrees Celsius
°F	Degrees Fahrenheit
AAL	Additional Authorization List
AF	Air Force
A/R	As Required
BFS	Brake Fluid, Silicone
BII	Basic Issue Item
BOI	Basis of Issue
CAGEC	Commercial and Government Entity Code
CBRN	Chemical, Biological, Radiological, and Nuclear
cm	Centimeter
COEI	Components of End Item
CPC	Corrosion Prevention and Control
CTA	Common Table of Allowance
cu	Cubic
DA	Department of the Army
dc	Direct Current
EIC	End Item Code
EIR	Equipment Improvement Recommendation
EMP	Electromagnetic Pulse

LIST OF ABBREVIATIONS / ACRONYMS - Continued

Abbreviation/Acronym	Name
FGC	Functional Group Code
ft	Foot
GAA	Grease, Artillery, and Automotive
GVW	Gross Vehicle Weight
HCI	Hardness Critical Item
HMMWV	High-Mobility Multipurpose Wheeled Vehicle
HMT	High-Mobility Trailer
IDN	Initial Distribution Number
in.	Inch
JTA	Joint Table of Allowances
kg	Kilogram
km	Kilometer
km/h	Kilometers per Hour
kPa	Kilopascal
lb	Pound
lb-ft	Pound-Foot
lb-in	Pound-Inch
LED	Light-Emitting Diode
LTT	Light Tactical Trailer
m	Meter
MAC	Maintenance Allocation Chart
mi	Mile
mm	Millimeter
mph	Miles per Hour
MTOE	Modified Table of Organization and Equipment
MWO	Modification Work Order
N•m	Newton Meter
NHA	Next Higher Assembly
NIIN	National Item Identification Number
NSN	National Stock Number
OE/HDO	Lubricating Oil, Internal Combustion Engine, Tactical Service
OEA	Oil, Engine Arctic
PMCS	Preventive Maintenance Checks and Services
P/N	Part Number
PQDR	Product Quality Deficiency Report
psi	Pounds per Square Inch
ROD	Report of Discrepancy
RPSTL	Repair Parts and Special Tools List
SAE	Society of Automotive Engineers
SATS	Standard Automotive Tool Set
SICPS	Standard Integrated Command Post System
SMR	Source, Maintenance, and Recoverability
SRA	Specialized Repair Activity
TAMMS	The Army Maintenance Management System
TB	Technical Bulletin
TDA	Table of Distribution and Allowances
TMDE	Test, Measurement, and Diagnostic Equipment
TOE	Table of Organization and Equipment
TOW	Tube Launched, Optically Tracked, Wire Guided
TWI	Tread Wear Indicator
U/I	Unit of Issue
UOC	Usable on Code
USMC	United States Marine Corp

LIST OF ABBREVIATIONS / ACRONYMS - Continued

Abbreviation/Acronym	Name
UUT	Unit Under Test
WP	Work Package

END OF WORK PACKAGE

OPERATOR MAINTENANCE
EQUIPMENT DESCRIPTION AND DATA

EQUIPMENT CHARACTERISTICS, CAPABILITIES, AND FEATURES

Characteristics

1. All trailers are designed to be towed by a towing vehicle without airbrake connections. A handbrake lever and cable assembly located on each side of the trailer activate a brake at each wheel. Control of each brake is independent.
2. In addition to handbrake-activated brakes, the trailers are equipped with an inertia-actuated hydraulic brake system. For technical principles of operation of this system, refer to Theory of Operation (WP 0003).
3. All trailers have a single axle with two wheels.
4. The trailer suspension consists of one shock absorber on each end of the axle.
5. Two stabilizers, stored in the front and installed in the rear, provide greater stability when loading or unloading cargo when the trailer is not coupled to the towing vehicle.

Capabilities and Features

Table 1. Maximum Towing Speeds With Maximum Payload.

MAXIMUM TOWING SPEEDS WITH MAXIMUM PAYLOAD EVENLY DISTRIBUTED ARE:	
Highway	55 mph (66.5 km/h)
Secondary Roads	35 mph (56.3 km/h)
Cross-Country	20 mph (32.2 km/h)
MAXIMUM PAYLOAD VARIES WITH MODEL DESIGNATION (Table 5).	

LOCATION AND DESCRIPTION OF MAJOR COMPONENTS

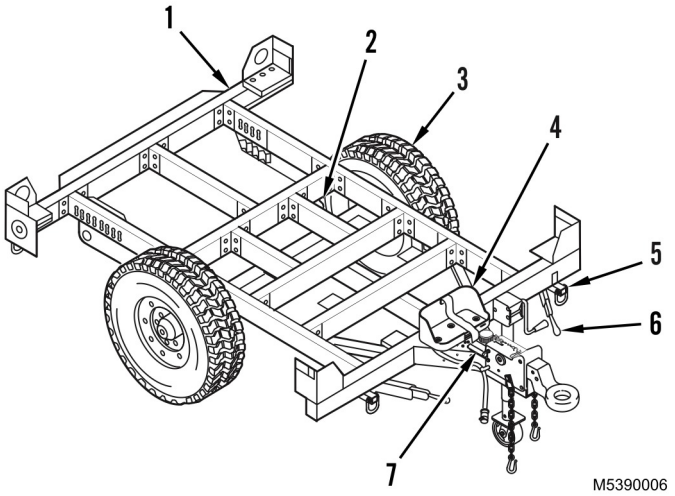

Figure 1. Trailer Chassis.

Table 2. Components and Description.

KEY	COMPONENT	DESCRIPTION
1	Chassis	Provides mounting for cargo body of M1101 and M1102 trailers.
2	Shock Absorbers	Dampen chassis and axle movement.
3	Wheel and Tire Assemblies	Support trailer load. Attached to ends of axle.
4	Decontamination Bracket	Holds and secures CBRN decontamination equipment.
5	Tiedown Shackles	Tie down trailer during shipment. Located at front and rear of chassis.
6	Handbrake Levers	Apply brake when trailer is stopped or parked.
7	Hydraulic Brake Actuator Assembly	Transmits braking forces from towing vehicle to trailer brakes by means of a lunette ring, master cylinder, hydraulic brake tubes, and wheel cylinders.

LOCATION AND DESCRIPTION OF MAJOR COMPONENTS - Continued

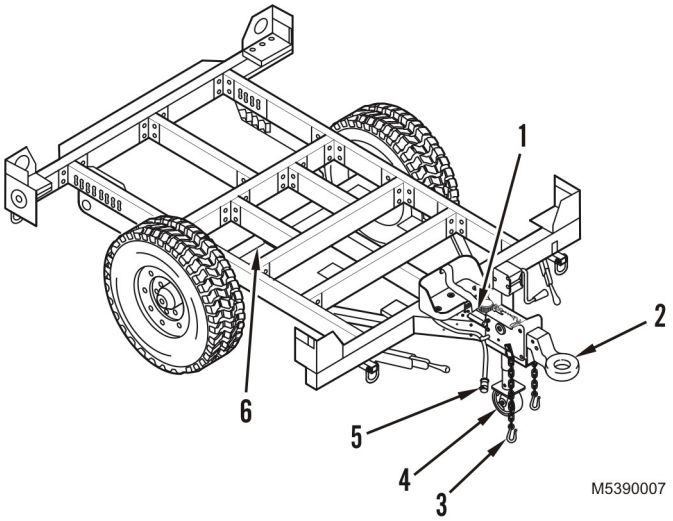

Figure 2. Trailer Chassis – Breakaway Cable Through Axle.

Table 3. Components and Description.

KEY	COMPONENT	DESCRIPTION
1	Breakaway Cable	Provides for emergency braking of trailer. Attaches to towing vehicle and applies brakes in the event that trailer breaks away from towing vehicle.
2	Lunette Ring	Couples trailer to towing vehicle pintle.
3	Safety Chains	Prevent trailer from fully breaking away. Hook to towing vehicle shackles.
4	Front Support Leg	**WARNING** **DO NOT move the trailer laterally (push/pull) using the front support leg as a third wheel or trailer dolly. Mounting bracket or front support leg may fail. Failure to comply may result in personnel death or injury, or equipment damage. Seek medical attention in event of injury.** Adjustable leg supports trailer when uncoupled from towing vehicle.
5	Intervehicular Cable	Provides electrical power from towing vehicle to trailer.
6	Axle	Carries chassis and allows wheels to rotate.

LOCATION AND DESCRIPTION OF MAJOR COMPONENTS - Continued

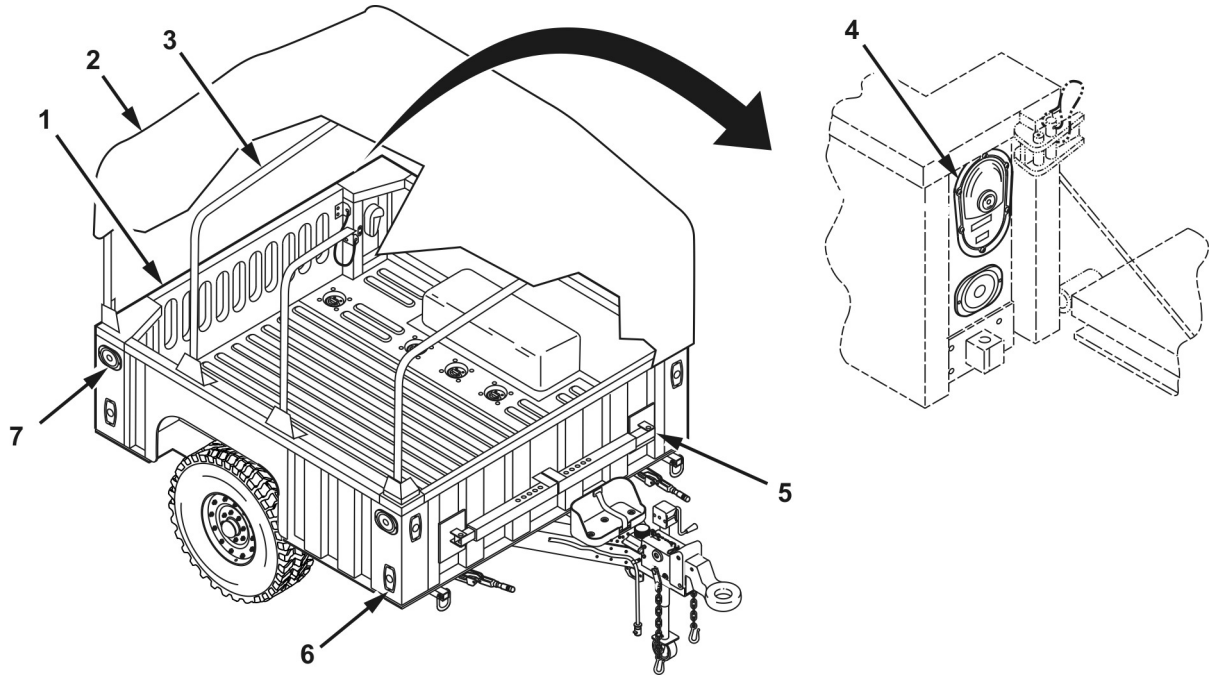

Figure 3. Trailer Chassis – Tailgate Through Reflectors.

Table 4. Components and Description.

KEY	COMPONENT	DESCRIPTION
1	Tailgate	Swings down for ease in loading and unloading cargo. Secured in position by two lanyard and pin assemblies.
2	Softcover	Protects cargo from weather. Part of optional Soft Top Kit found in Additional Authorization List (AAL) (WP 0094).
3	Bow Assemblies	Support the softcover. Part of optional Soft Top Kit found in Additional Authorization List (AAL) (WP 0094).
4	Composite Lights	Indicate trailer presence to vehicles traveling behind. Consists of blackout lights, taillights, stoplights, and turn signals.
5	Rear Stabilizers	Prevent trailer from tipping over when loading and unloading cargo. Stored in position shown. Installed on rear of chassis.
6	Marker Lights	Indicate trailer presence to surrounding vehicles.
7	Reflectors	Indicate trailer presence to surrounding vehicles.

LOCATION AND DESCRIPTION OF MAJOR COMPONENTS - Continued

LOCATION AND CONTENTS OF DATA PLATES

Two data plates are on the curbside front frame. They provide identification, registration, dimension, and weight information.

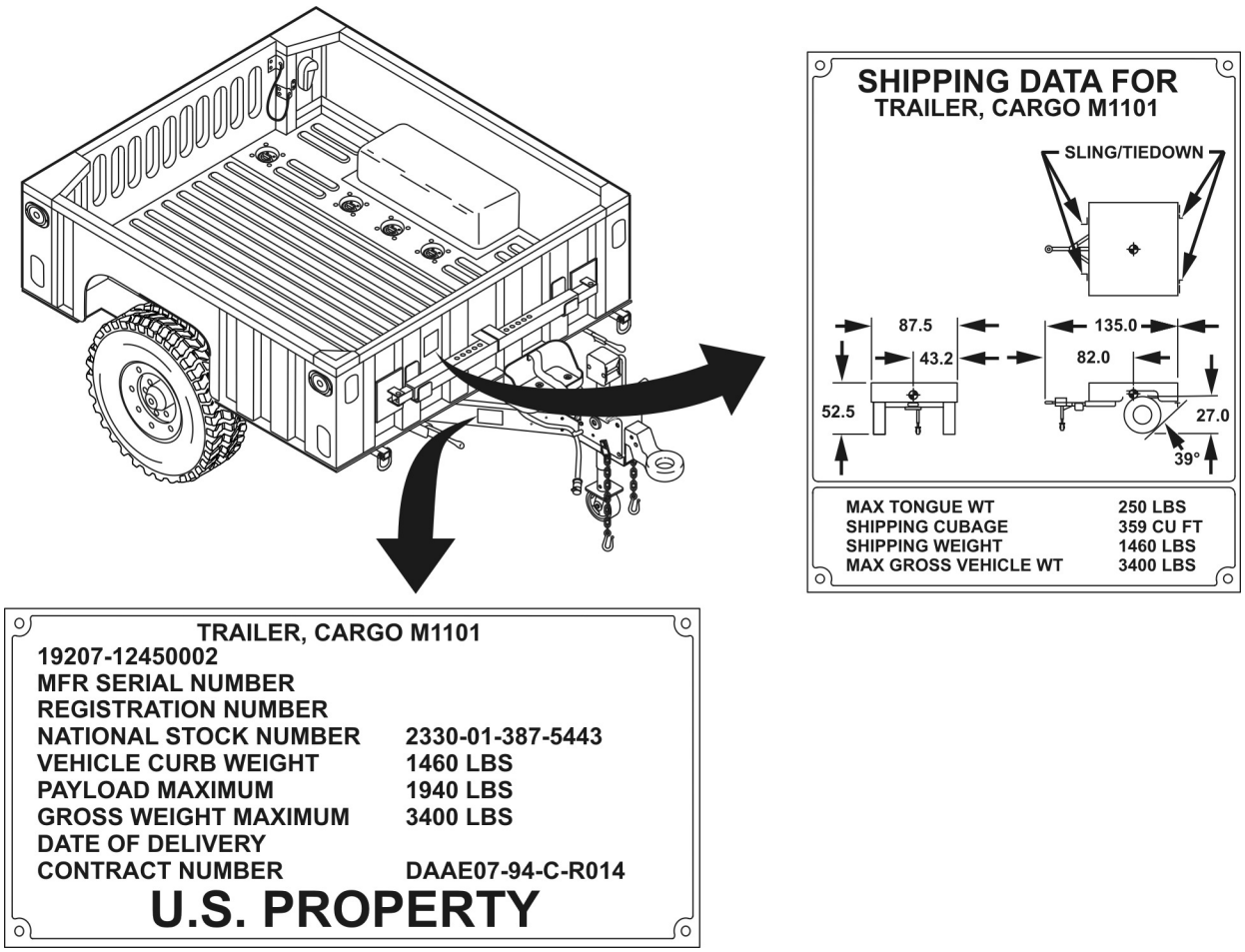

Figure 4. M1101 Cargo Trailer.

LOCATION AND CONTENTS OF DATA PLATES - Continued

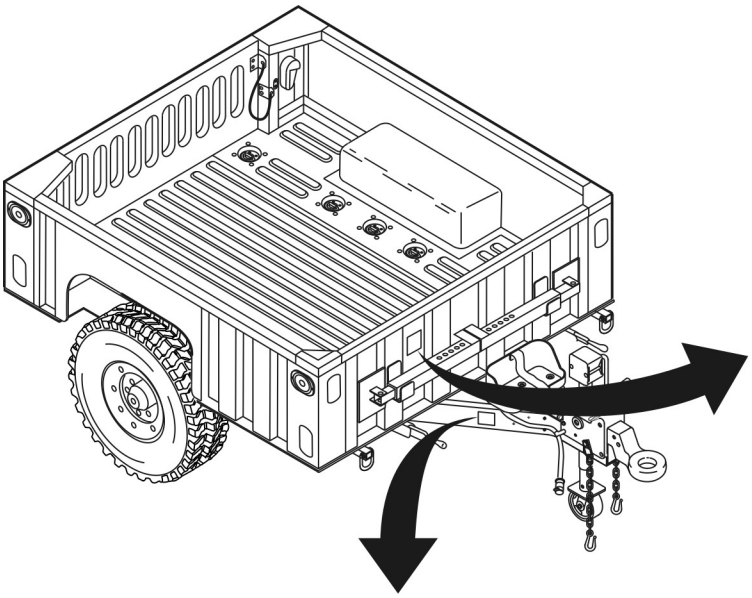

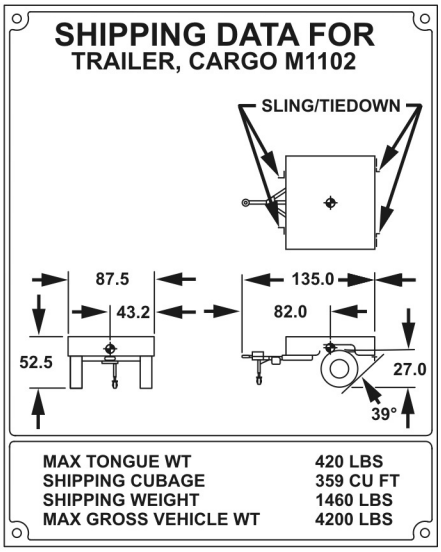

TRAILER, CARGO M1102
19207-12450002
MFR SERIAL NUMBER
REGISTRATION NUMBER

NATIONAL STOCK NUMBER	2330-01-387-5426
VEHICLE CURB WEIGHT	1460 LBS
PAYLOAD MAXIMUM	2740 LBS
GROSS WEIGHT MAXIMUM	4200 LBS
DATE OF DELIVERY	
CONTRACT NUMBER	DAAE07-94-C-R014

U.S. PROPERTY

Figure 5. M1102 Cargo Trailer.

LOCATION AND CONTENTS OF DATA PLATES - Continued

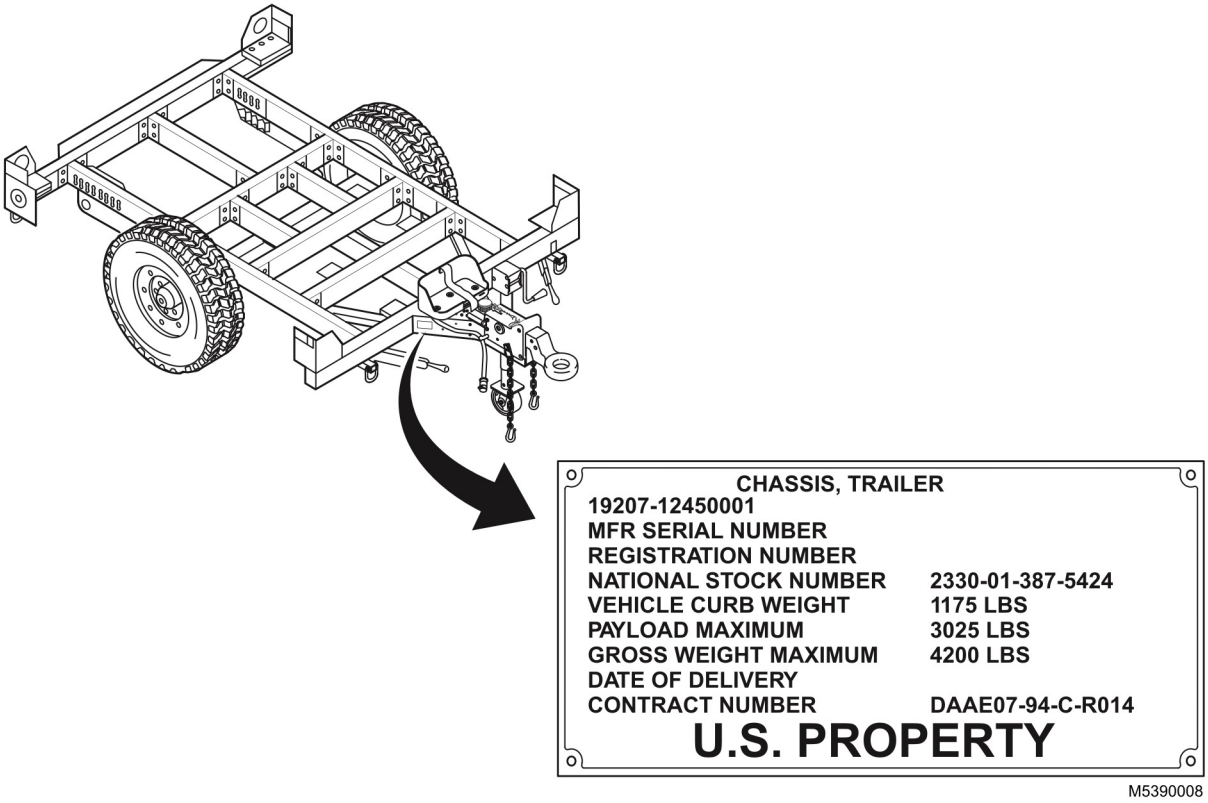

Figure 6. Trailer Chassis.

DIFFERENCES BETWEEN MODELS

NOTE

- Light High-Mobility Multipurpose Wheeled Vehicles (HMMWV) that have been modified have a decal on the rear crossmember where the pintle attaches that states: "AUTHORIZED TO TOW TRAILER WITH MAX GROSS WEIGHT OF 3400 LBS." A Modification Work Order (MWO) tag should also be present on the driver-side reinforcement panel (just behind the seat) that identifies MWO 9-2320-280-20-7 has been applied.
- Heavy HMMWVs that have been modified have a stencil on the rear bumper reinforcement plate that states: "AUTHORIZED TO TOW TRAILER WITH MAX GROSS WEIGHT OF 4200 LBS." An MWO tag should also be present on the driver-side reinforcement panel (just behind the seat) that identifies MWO 9-2320-280-20-6 has been applied.

1. The difference between the M1101 and M1102 cargo trailers is listed on the Identification and Shipping Plates. The difference between the maximum Gross Vehicle Weight (GVW) is based solely on the towing vehicle. All trailer models can be towed by a HMMWV M1097/M1114 series in accordance with the identification plate. The M1101 cargo trailer and the trailer chassis can be towed by a HMMWV M998/M1038 series when the GVW does not exceed 3400 lb (1542 kg). To determine which HMMWV can tow a chassis version of the Light Tactical Trailer (LTT), look at the trailer data plate that identifies the total

DIFFERENCES BETWEEN MODELS - Continued

system weight. Use a modified light HMMWV if system weight is 3400 lb (1542 kg) or less. Use a modified heavy HMMWV if system weight is 3400 lb to 4200 lb (1542 kg to 1905 kg). There are no physical differences between the M1101 and M1102 trailers. Refer to table below for towing vehicle requirements.

2. The data listed on the Trailer Chassis Identification and Shipping Plates is different from both the M1101 and M1102 trailers. In addition, the trailer chassis has no cargo body.

Table 5. Differences Between Models.

HMMWV MODEL NUMBER	HMMWV DESCRIPTION	MWO REQUIREMENTS				REMARKS
		M1101	M1102	<3400 LBS	<4200 LBS	
M998/M998A1	Cargo/Troop	A		A		
M1038/M1038A1	Cargo/Troop	A		A		
M1097/M1097A1/ M1097A2	Heavy Variant	B	B	B	B	
M966/M966A1	TOW Carrier	A		A		
M1036	TOW Carrier	A		A		
M1045/M1045A1	TOW Carrier	A		A		
M1045A2	TOW Carrier	C	C	C	C	USMC only. M1045A2 comes standard with the A kit equivalent. No kits required.
M1046/M1046A1	TOW Carrier	A		A		
M1046A2	TOW Carrier	B	B	B	B	
M1025/M1025A1	Armament Carrier	A		A		
M1025A2	Armament Carrier	B	B	B	B	
M1026/M1026A1	Armament Carrier	A		A		
M1043/M1043A1	Armament Carrier	A		A		USMC only.
M1043A2	Armament Carrier	C	C	C	C	USMC only. M1043A2 comes standard with the A kit equivalent. No kits required.
M1044/M1044A1	Armament Carrier	A		A		
M1037*	Shelter Carrier	B(1)		B(1)		
M1042	Shelter Carrier	B(1)		B(1)		
M996/M996A1	Ambulance	B(1)		B(1)		

DIFFERENCES BETWEEN MODELS - Continued

Table 5. Differences Between Models - Continued.

HMMWV MODEL NUMBER	HMMWV DESCRIPTION	MWO REQUIREMENTS				REMARKS
		M1101	M1102	<3400 LBS	<4200 LBS	
M997/M997A1	Ambulance	B(1)		B(1)		
M1035/M1035A1	Ambulance	A				
M1035A2	Ambulance	B	B	B	B	
M1113*	S250 Shelter Carrier	B	B	B	B	
M1114	Up-Armored	B	B	B	B	
M1116	Up-Armored	B	B	B	B	AF only.
M1123	Cargo/Troop	C	C	C	C	USMC only. Comes standard with the A kit equivalent. No kits required.

NOTE

HMMWVs with the Tow Pintle Extension Kit do not require either of the MWOs listed.

Key:
A = Need MWO 9-2320-280-7, Crossmember Kit for light HMMWVs.
B = Need MWO 9-2320-280-6, Bumper Reinforcement Place for heavy HMMWVs.
<3400 LBS = Any system mounted on LTT chassis with GVW of 3400 lb (1542 kg) or less.
<4200 LBS = Any system mounted on LTT chassis with GVW of 4200 lb (1905 kg) or less.
B(1) = Need MWO 9-2320-6, but must change stencil to read "3400 LBS" instead of "4200 LBS."
C = comes equipped; no MWO required.
* = Pintle extensions are required on M1037/M1113 with SICPS (M788) mounted to tow a trailer.

EQUIPMENT DATA

Table 6. Equipment Data.

Axle	Independent Rubber Torsion
Dimensions (Overall)	
Length	135 in. (343 cm)
Width	87.5 in. (222.3 cm)
Height	
M1101/M1102	52.5 in. (130.2 cm)
Trailer Chassis	40.5 in. (102.9 cm)
M1101/M1102 With Soft Top	99.5 in. (238.3 cm)
Weight Empty	
M1101/M1102	1460 lb (662 kg)
Trailer Chassis	1175 lb (533.5 kg)
Payload Weight (Maximum)	
M1101	1940 lb (879.9 kg)
M1102	2740 lb (1242.8 kg)
Trailer Chassis	3025 lb (1373.4 kg)
Tongue Weight (Maximum)	
M1101	250 lb (113.4 kg)
M1102	420 lb (190.5 kg)
Trailer Chassis	420 lb (190.5 kg)
Total Weight With Payload (Maximum)	
M1101	3400 lb (1522.1 kg)
M1102	4200 lb (1905.1 kg)
Trailer Chassis	4200 lb (1905.1 kg)
Shipping Weight	
M1101/M1102	1460 lb (662 kg)
Trailer Chassis	1230 lb (557.9 kg)
Shipping Volume	
M1101/M1102	359 cu ft (9.8 cu m)
Trailer Chassis	288 cu ft (8.1 cu m)
Angle of Departure	39 degrees

EQUIPMENT DATA - Continued

Table 6. Equipment Data - Continued.

Center of Gravity (Measured From Ground Level)	
Empty	
M1101/M1102	27 in. (83.8 cm)
Trailer Chassis	24.4 in. (69.6 cm)
Loaded	
M1101	46 in. (116.8 cm)
M1102	48 in. (121.9 cm)
Trailer Chassis	40 in. (101.6 cm)
Electrical System	24 volt
Fording Depth (Maximum)	60 in. (152.4 cm)
Handbrakes	
Quantity	2
Location	Front of Frame
Actuation	Mechanical
Operating Temperature	−50°F (−45.6°C) to +120°F (48.9°C)
Suspension	
Shock Absorbers	Hydraulic, Double-Acting
Tires	
Quantity	2
Size	37X12.5R16.5LT
Ply	5-Ply Tread, 2-Ply Sidewall
Inflation	17 psi (117 kPa)
Towing Attachment	Lunette Ring
Wheels	
Rim Size	16.5 X 8.25 X 6.5 BC
Number of Lugs	8
Brakedrum	
Maximum Inside Diameter	12.09 in. (30.7 cm)

END OF WORK PACKAGE

OPERATOR MAINTENANCE
THEORY OF OPERATION

GENERAL

This work package contains the theory of operation of the M1101, M1102, and Chassis Trailers.

ELECTRICAL SYSTEM

The trailer is equipped with a 24-volt dc electrical system, which receives its power from the prime mover through the trailer intervehicular cable assembly. The intervehicular cable assembly is connected to the trailer chassis branched wiring harness. The branched wiring harness leads to two composite lights located at the rear of the trailer and to nine clearance marker lights on the front sides and rear of the cargo body.

Each composite light contains two lamps and two Light-Emitting Diodes (LED): one lamp functions as a taillight when the service lights are turned on, one lamp functions as both a stoplight and turn signal, one LED functions as a blackout taillight when the blackout light switch is turned on, and one LED functions as a blackout stoplight when the blackout light switch is turned on. Sealed LEDs are also available. The blackout lights automatically turn off the taillight, stoplight, and turn signals if both switches are on at the same time.

Four amber clearance marker lights are mounted on the cargo body (two on the front and two on the front sides). Two red clearance marker lights are mounted on the rear sides of the cargo body, and three red marker lights are mounted on the rear of the trailer frame. Each marker light contains one lamp and functions when the service lights of the towing vehicle are turned on. Sealed LEDs are also available. All of the marker lights automatically turn off when the blackout light switch is turned on.

HYDRAULIC BRAKE SYSTEM

The hydraulic brake system applies the brakes automatically when the towing vehicle slows or stops or when the trailer breaks away from the towing vehicle.

The hydraulic brake system consists of a hydraulic brake actuator assembly, hydraulic brake tube assemblies, hose assembly, and wheel cylinders to activate the service brakes.

The major components of the hydraulic brake system and their functions are as follows:

1. **Breakaway Chain** – Attaches to towing vehicle. It will pull the breakaway lever up if the trailer and towing vehicle uncouple.
2. **Breakaway Lever** – Controls the master cylinder. When the lever is up, the brakes are applied. When it is down, the lunette ring controls the master cylinder.
3. **Leaf Spring** – Holds the breakaway lever up. The breakaway lever must be reset any time it has been pulled up.
4. **Master Cylinder Assembly** – Changes mechanical motion of lunette ring and breakaway lever into hydraulic pressure. It has a built-in shock absorber to prevent jerky lunette ring movement. The damper also slows the rate of hydraulic pressure increase when the towing vehicle backs up, thus allowing the trailer to be slowly backed up for short distances on level terrain.
5. **Wheel Cylinder** – Changes hydraulic pressure into mechanical motion. When the wheel cylinder is pressurized, it pushes the brakeshoes against the brakedrum.
6. **Brakeshoes** – Set against the brakedrum when pushed by the wheel cylinder.
7. **Hydraulic Brake Tubes and Hoses** – Transfer hydraulic pressure from the master cylinder assembly to the wheel cylinder.
8. **Lunette Ring** – Attaches to towing vehicle pintle hook. The lunette ring controls the master cylinder assembly. When the towing vehicle goes forward, the lunette ring is pulled and the brakes are released. When the towing vehicle slows down, the weight of the trailer pushes the lunette ring into the towing vehicle and the brakes are applied.

HYDRAULIC BRAKE SYSTEM - Continued

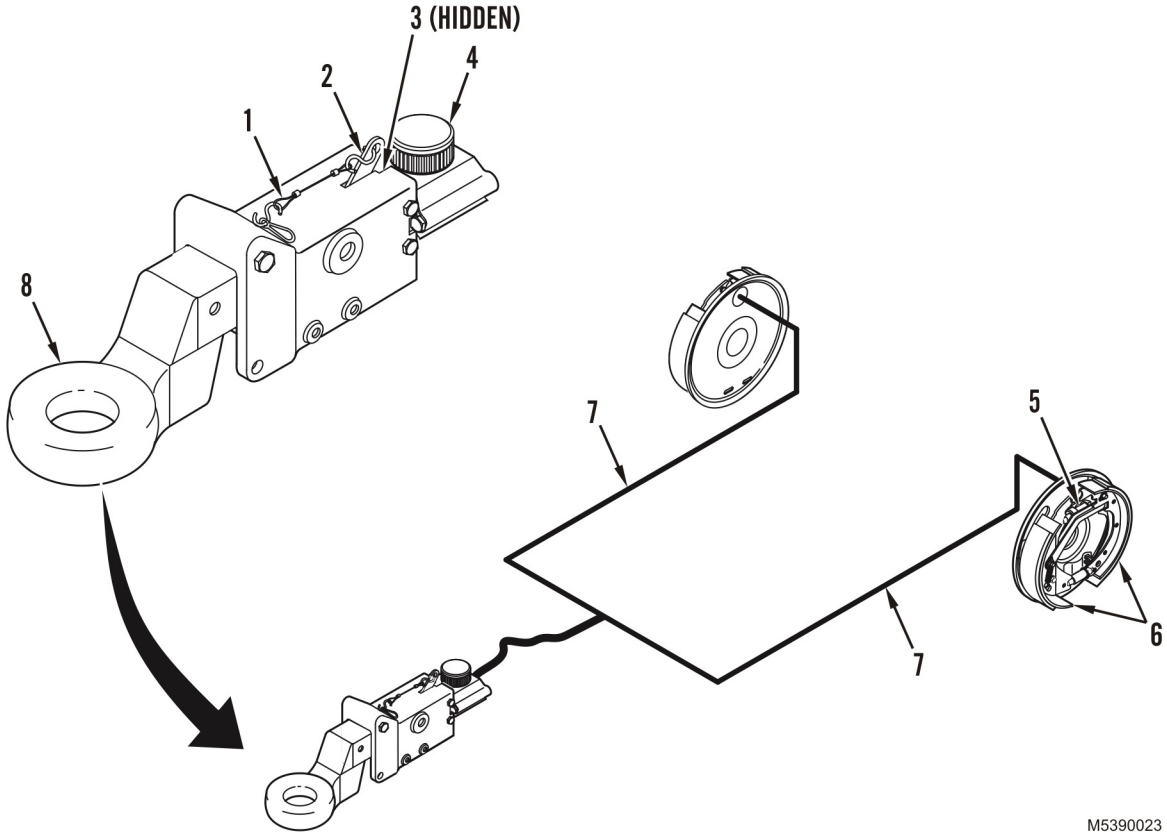

Figure 1. Hydraulic Brake System.

HYDRAULIC BRAKE SYSTEM - Continued

HANDBRAKE SYSTEM

The handbrake levers (Figure 2, Item 1) and brake cables transfer mechanical motion from the handbrake lever to the brakeshoes to hold trailer in place when not in use, or when loading or unloading.

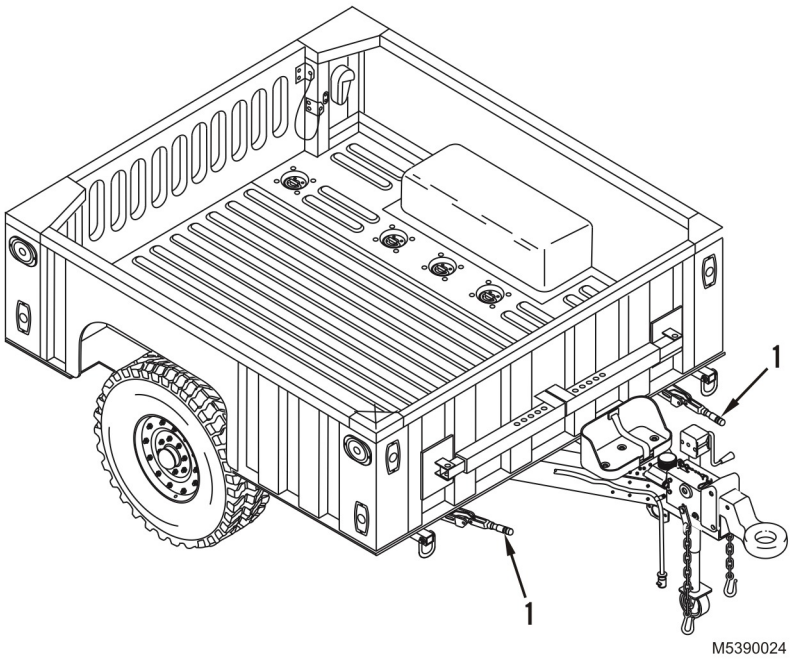

Figure 2. Handbrakes.

END OF WORK PACKAGE

CHAPTER 2

OPERATOR MAINTENANCE INSTRUCTIONS

OPERATOR MAINTENANCE
DESCRIPTION AND USE OF OPERATOR CONTROLS AND INDICATORS

WARNING

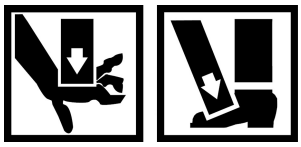

DO NOT move the trailer laterally (push/pull) using the front support leg as a third wheel or trailer dolly. Mounting bracket or front support leg may fail. Failure to comply may result in personnel death or injury, or equipment damage. Seek medical attention in event of injury.

GENERAL

This work package shows the location and describes the function of all controls and indicators. Review this thoroughly before operating the trailers.

Table 1. Operator Controls and Indicators.

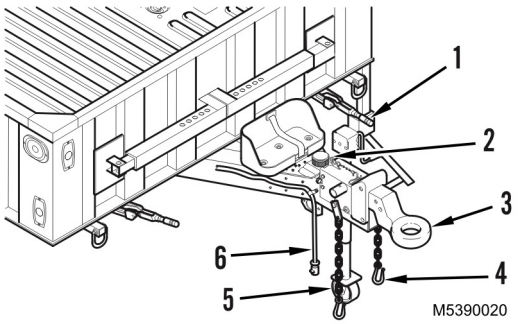

Figure 1. Controls and Indicators.

Key	Control/Indicator	Function
1	Handbrake Lever	Applies or releases brakes.
2	Breakaway Cable	Applies brakes if trailer accidently uncouples from towing vehicle.
3	Lunette Ring	Couples trailer to towing vehicle.
4	Safety Chains	Couple trailer to towing vehicle to prevent runaway if lunette ring uncouples.
5	Front Support Leg	Supports trailer when it is uncoupled from towing vehicle.
6	Intervehicular Cable	Provides electrical power from towing vehicle to trailer.

END OF WORK PACKAGE

OPERATOR MAINTENANCE
OPERATION UNDER USUAL CONDITIONS

INITIAL SETUP:

References
TC 21-305-20
WP 0002
WP 0023

ASSEMBLY AND PREPARATION FOR USE

1. Perform all BEFORE Preventive Maintenance Checks and Services (PMCS) (WP 0023) before operating trailer.
2. Review all towing vehicle operating instructions before coupling or uncoupling the trailer.

INITIAL ADJUSTMENTS, CHECKS, AND SELF-TEST

There are no initial adjustments, checks, or self-tests.

END OF TASK

USE OF CHOCK BLOCKS

WARNING

Chock blocks are used to keep the trailer from moving. Failure to comply may result in personnel death or injury, or equipment damage. Seek medical attention in event of injury.

1. If trailer is parked on level surface and neither side of trailer needs to be raised, place one chock block (Figure 1, Item 1) in front of one tire, and place another chock block in back of the other tire.

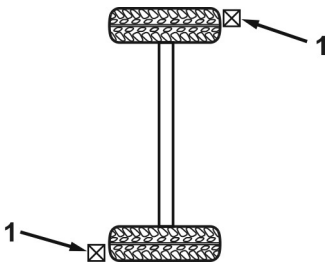

Figure 1. Chock Block Placement on Level Surface With Neither Side of Trailer Raised.

USE OF CHOCK BLOCKS - Continued

2. If trailer is parked on level surface and one side of trailer needs to be raised, place chock blocks (Figure 2, Item 1) in front and back of tire remaining on the ground.

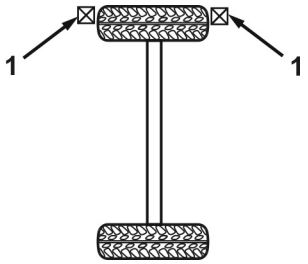

Figure 2. Chock Block Placement on Level Surface With One Side of Trailer Raised.

3. If trailer is parked on an incline with front of trailer facing uphill, place chock blocks (Figure 3, Item 1) in back of both tires.

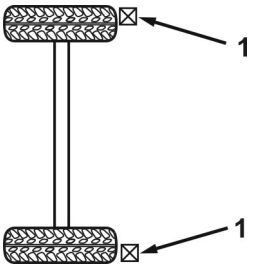

Figure 3. Chock Block Placement on Incline With Front of Trailer Facing Uphill.

4. If trailer is parked on an incline with front of trailer facing downhill, place chock blocks (Figure 4, Item 1) in front of both tires.

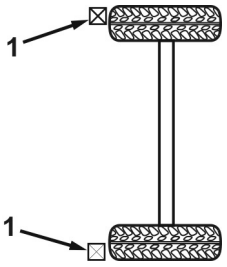

Figure 4. Chock Block Placement on Incline With Front of Trailer Facing Downhill.

END OF TASK

LOADING THE TRAILER

WARNING

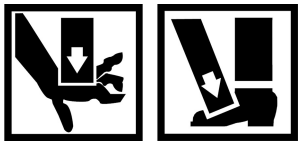

If the trailer is not coupled to the towing vehicle, ensure that the front support leg is down and locked, the parking brakes are applied, the wheels are chocked, and the rear stabilizers are installed. Failure to follow this warning may cause trailer to roll or tilt. Failure to comply may result in personnel death or injury, or equipment damage. Seek medical attention in event of injury.

1. Apply both handbrakes.
2. Securely chock both wheels (page 0005-1).
3. Remove both rear stabilizers from the front of the cargo body, and install at the rear of the trailer. Lower stabilizer feet until they contact the ground.

WARNING

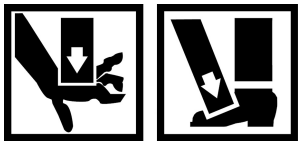

Ensure that the weight of load is evenly distributed. Too much weight at the front will make the trailer difficult to raise with the front support leg. Too much weight at the rear will cause the trailer to tip backward. Failure to comply may result in personnel death or injury, or equipment damage. Seek medical attention in event of injury.

4. Distribute load evenly over trailer starting between third and fourth cargo tiedown rings and working toward front and rear of trailer. Do not exceed maximum allowable payload (WP 0002).

LOADING THE TRAILER - Continued

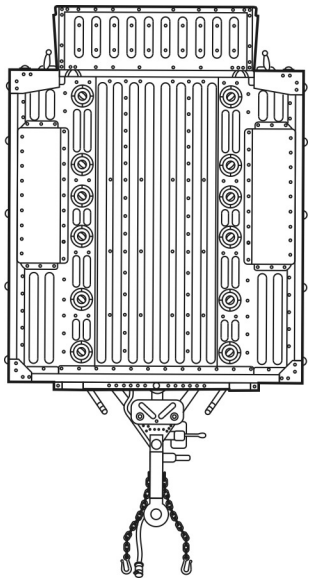

Figure 5. Load Distributed Evenly Over Trailer.

NOTE

Distribute load evenly across floor of trailer before stacking.

5. If stacking is necessary, begin additional row using same loading pattern as in step 4.
6. Secure load as required using tiedown straps.

END OF TASK

COUPLING TRAILER TO TOWING VEHICLE

NOTE

Ensure that towing vehicle and trailer are on level surface before coupling.

1. Apply trailer handbrakes.

WARNING

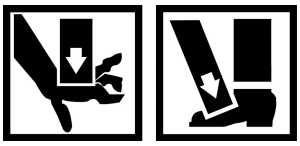

Ensure that the weight of load is evenly distributed. Too much weight at the front will make the trailer difficult to raise with the front support leg. Too much weight at the rear will cause the trailer to tip backward. Failure to comply may result in personnel death or injury, or equipment damage. Seek medical attention in event of injury.

2. Use front support leg crank to raise trailer drawbar until lunette ring is higher than towing vehicle pintle hook.
3. Remove the safety pin (Figure 6, Item 1) from the pintle hitch (Figure 6, Item 2) on the towing vehicle.

COUPLING TRAILER TO TOWING VEHICLE - Continued

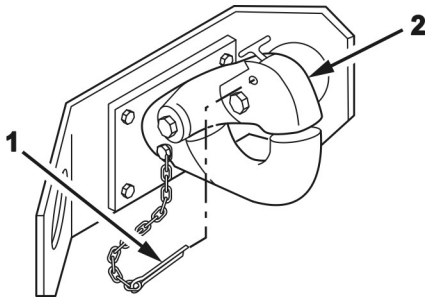

Figure 6. Safety Pin Removed From Pintle Hitch.

4. Open the pintle hitch (Figure 7, Item 2) by pulling up on the locking latch (Figure 7, Item 1).

WARNING

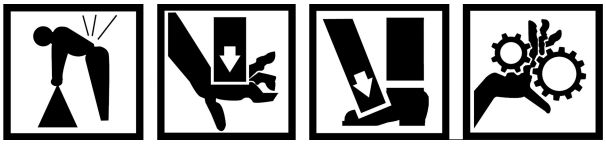

- **All personnel must stand clear of towing vehicle and trailer during coupling operation. Failure to comply may result in personnel death or injury. Seek medical attention in event of injury.**
- **Keep hands away from lunette ring during coupling/uncoupling operations. Failure to comply may result in personnel injury. Seek medical attention in event of injury.**

5. Back the towing vehicle in front of lunette ring (Figure 7, Item 3).
6. Use trailer front support leg crank to adjust height of lunette ring. Then place lunette ring on towing vehicle pintle hook (Figure 7, Item 4).
7. Close pintle hitch (Figure 7, Item 2). Check that locking latch (Figure 7, Item 1) is locked by pulling up on pintle hitch. Pintle hitch should not come up. Install safety pin (Figure 7, Item 5) into pintle hitch.

CAUTION

Safety chains must be attached on opposite sides of the trailer tongue or frame and crossed under the tongue when passed forward to the towing vehicle so as to cradle the tongue in the event of a breakaway. Slack should be sufficient only to permit full turns. Failure to comply may result in equipment damage.

8. Cross the two trailer safety chains under the drawbar, and hook to towing vehicle eyebolts (Figure 7, Item 6). If the safety chains are too long, they can be twisted to be shortened. It is recommended that wire be used across the hook openings to prevent accidental unhooking.

COUPLING TRAILER TO TOWING VEHICLE - Continued

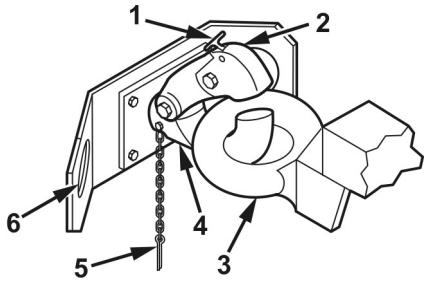

Figure 7. Trailer Coupled to Towing Vehicle.

9. Fully retract rear stabilizers. Then remove and stow rear stabilizers on the front of the cargo body.

WARNING

- **Drawbar is heavy – up to 420 lb (190.5 kg) loaded tongue weight. Use front support (landing) leg crank to raise and lower trailer drawbar. If support leg assembly is inoperative, use suitable lifting device to lift the drawbar. If a suitable lifting device is not available, remove load from trailer and use four or more people to lift drawbar. Failure to comply may result in personnel death or injury, or equipment damage. Seek medical attention in event of injury.**
- **DO NOT move the trailer laterally (push/pull) using the front support leg as a third wheel or trailer dolly. Mounting bracket or front support leg may fail. Failure to comply may result in personnel death or injury, or equipment damage. Seek medical attention in event of injury.**

CAUTION

When operating the crank handle, DO NOT force the front support leg beyond the normal operating range. Failure to comply may result in equipment damage.

10. Crank the trailer front support leg up to the stowed position. Then remove locking pin, swing leg up parallel to the ground, and reinsert locking pin in the appropriate holes.
11. Attach breakaway cable (Figure 8, Item 1) to towing vehicle. Ensure that there is enough slack in cable to allow trailer to make full turns.

CAUTION

Ensure that breakaway lever is fully released. If lever is not fully released, brakes will drag, heat up, and burn out. Failure to comply may result in equipment damage.

12. Ensure that breakaway lever (Figure 8, Item 3) is pushed all the way back toward trailer and that lever is not engaged in leaf spring (Figure 8, Item 2).
13. Connect the electrical plug on the intervehicular power cable to the receptacle of the towing vehicle.
14. Check all towing vehicle and trailer lights for proper operation.
15. Release trailer handbrakes.

COUPLING TRAILER TO TOWING VEHICLE - Continued

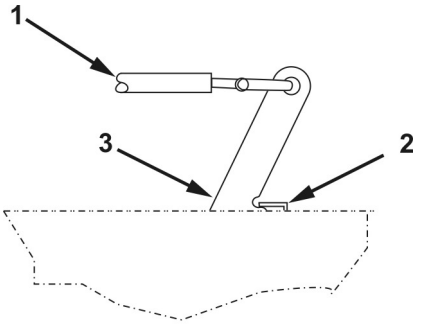

Figure 8. Breakaway Cable Attached to Towing Vehicle.

END OF TASK

TOWING INSTRUCTIONS

NOTE

Refer to TC 21-305-20, Manual for the Wheeled Vehicle Operator, for further information on proper towing practices.

Driving

CAUTION

Avoid sudden stops. Sudden stops may cause drawbar to bend or buckle and may cause damage to hydraulic brake actuator assembly. Failure to comply may result in equipment damage.

1. When the trailer is coupled, always start and stop the towed load slowly and gradually. Do this whether or not the trailer is loaded.
2. When driving a vehicle towing a trailer with a hydraulic brake actuator assembly, decelerate slowly. Sudden and fast deceleration will cause the trailer hydraulic brakes to be applied.
3. Never exceed the maximum speed of 55 mph (88.5 km/h) highway or 20 mph (32.2 km/h) cross-country.
4. When driving the towing vehicle and trailer, keep the overall length of the unit in mind when turning and passing other vehicles. Because the unit is hinged in the middle, turning and backing are also affected. Heavier payloads will increase stopping distance and decrease off-road maneuverability.

Turning

CAUTION

Avoid tight turns. Tight turns may cause damage to hydraulic brake actuator assembly. Failure to comply may result in equipment damage.

1. When turning corners, allow for the fact that the trailer wheels may turn inside the turning radius of the towing vehicle.
2. To make a right turn at an intersection, drive the towing vehicle partway into the intersection, then cut sharply to the right. This will allow for the turning radius of the trailer to keep its wheels off the curb.

TOWING INSTRUCTIONS - Continued

Backing

CAUTION

Always back the towing vehicle slowly and gradually. Failure to comply may result in equipment damage.

1. Whenever possible, use an assistant driver or another person to act as a ground guide.
2. Adjust all towing vehicle rearview mirrors before backing.
3. When backing, the rear of the trailer will move in the opposite direction from which the towing vehicle is turned. When the towing vehicle is turned to the right, the rear of the trailer will go left. When the towing vehicle is turned and backing in a straight line is required, turn the towing vehicle in the direction the trailer is moving. This will slowly bring the towing vehicle and trailer into a straight line.

CAUTION

Avoid sudden stops. Sudden stops may cause drawbar to bend or buckle and may cause damage to hydraulic brake actuator assembly. Failure to comply may result in equipment damage.

Stopping

Always stop the towing vehicle by applying brakes gradually and smoothly. Do this whether or not the trailer is loaded.

Parking

1. When the towing vehicle and the trailer are to be left unattended, set the towing vehicle parking brakes, turn off the engine, and set wheel chocks (page 0005-1).
2. Apply trailer handbrakes.

END OF TASK

UNCOUPLING TRAILER FROM TOWING VEHICLE

NOTE

Park trailer on level surface if possible. Leave room at rear for loading or unloading of cargo if required.

1. Apply handbrakes.
2. Lower front support leg, and lock into vertical position with locking pin.
3. Disconnect intervehicular power cable, breakaway cable, and safety chains from towing vehicle.

WARNING

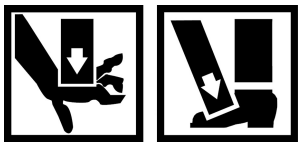

If trailer is loaded, rear stabilizers must be installed prior to opening HMMWV pintle hook. Failure to comply may result in personnel death or injury, or equipment damage. Seek medical attention in event of injury.

4. If trailer is loaded, install rear stabilizers.
5. Open pintle hitch on towing vehicle by removing safety pin and lifting top locking latch.

WARNING

- **Drawbar is heavy – up to 420 lb (190.5 kg) loaded tongue weight. Use front support (landing) leg crank to raise and lower trailer drawbar. If support leg assembly is inoperative, use suitable lifting device to lift the drawbar. If a suitable lifting device is not available, remove load from trailer and use four or more people to lift drawbar. Failure to comply may result in personnel death or injury, or equipment damage. Seek medical attention in event of injury.**
- **DO NOT move the trailer laterally (push/pull) using the front support leg as a third wheel or trailer dolly. Mounting bracket or front support leg may fail. Failure to comply may result in personnel death or injury, or equipment damage. Seek medical attention in event of injury.**

6. Crank the front support leg to raise the drawbar so that the lunette ring is clear of the pintle hook.

CAUTION

When operating the crank handle, DO NOT force the front support leg beyond the normal operating range. Failure to comply may result in equipment damage.

7. Close the pintle hitch and reinsert the safety pin.

END OF TASK

UNLOADING TRAILER

WARNING

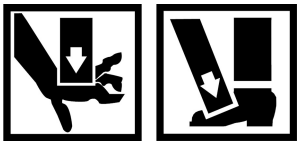

If the trailer is not coupled to the towing vehicle, ensure that the front support leg is down and locked, the parking brakes are applied, the wheels are chocked, and the rear stabilizers are installed. Failure to follow this warning may cause trailer to roll or tilt. Failure to comply may result in personnel death or injury, or equipment damage. Seek medical attention in event of injury.

1. If trailer is not coupled to towing vehicle, ensure that rear stabilizers are in position.
2. Remove cargo cover and tiedown straps as required.
3. If possible, unload from trailer center of gravity, working toward front and rear of trailer. This will keep the load evenly distributed.

END OF TASK

OPERATING AUXILIARY EQUIPMENT

There are no auxiliary equipment items requiring operation by the Light Tactical Trailer (LTT) operator.

END OF TASK

HANDBRAKE ADJUSTMENT

1. Chock wheels (page 0005-1) and release handbrake handle.
2. Turn adjusting knob clockwise as tightly as possible by hand.
3. Apply handbrake handle.
4. If handbrake cannot be applied, turn adjusting knob counterclockwise one full turn at a time until parking brake can be applied.

END OF TASK

END OF WORK PACKAGE

OPERATOR MAINTENANCE
OPERATION UNDER UNUSUAL CONDITIONS

INITIAL SETUP:

References
TC 21-305-20
WP 0002
WP 0064

WARNING

Accidental or intentional introduction of liquid contaminants into the environment is a violation of state, federal, and military regulations. Refer to Army Petroleum, Oils, and Lubricants (POL) for information concerning storage, use, and disposal of these liquids. Failure to comply may cause damage to environment and health of personnel. Seek medical attention in the event of an injury.

OPERATION IN COLD WEATHER

1. Refer to Lubrication Instructions (WP 0064) for proper lubricants to use in cold weather.
2. Refer to TC 21-305-20 for special instructions on driving hazards that may be found during cold weather conditions.
3. Extreme cold can cause wires and cables to become stiff and brittle. Avoid excess bending of intervehicular cable when connecting to or disconnecting from towing vehicle and wiring harness when performing Preventive Maintenance Checks and Services (PMCS).
4. Ensure that tires are properly inflated. Tires may freeze to the ground or have flat spots if underinflated.
5. Brakeshoes may freeze to the drum and require preheating to prevent damage.

END OF TASK

OPERATION IN HOT WEATHER

1. Refer to Lubrication Instructions (WP 0064), for proper lubricants to use in hot weather.
2. DO NOT park the trailer in sunlight for a long time. Heat and sunlight shorten tire life. Shelter or cover trailer to provide adequate protection.

END OF TASK

OPERATION IN RAINY OR HUMID CLIMATES

1. Inspect, clean, and lubricate inactive equipment frequently to prevent rust and fungus accumulation.
2. If installed, inspect soft cover for fungus, rot, or standing water on top.
3. Wet brakes increase stopping distances. Factor this increased distance into your driving.

END OF TASK

OPERATION IN SANDY OR DUSTY CLIMATES

1. Clean, inspect, and lubricate more often in sandy or dusty conditions.
2. If necessary, reduce tire pressure when driving over loose sand. When reduced tire pressure is no longer necessary or when tactical situation permits, return tires to normal pressure.

END OF TASK

OPERATION IN SALTWATER AREAS

1. Clean, inspect, and lubricate more often in saltwater areas.
2. Saltwater immersion will cause rapid rusting and corrosion of metal parts. After operation in saltwater or when tactical situation permits, wash the trailer with fresh water.

END OF TASK

OPERATION IN ROCKY AND HILLY TERRAIN

1. Use extreme caution when operating in rocky and hilly terrain. Ensure that tires are fully inflated to minimize damage to tires (WP 0002).
2. An unusually cool brake hub (grease cap)/wheel assembly when operating in hilly terrain indicates an inoperative service brake. Exercise/use caution as brakes will not operate as usual.

END OF TASK

AT HALT/PARKING

1. For short shutdown periods, park in a sheltered spot out of the wind. For long shutdown periods, if high, dry ground is not available, prepare a footing of planks or brush.
2. Cover the trailer with canvas or tarpaulins, keeping the ends of the canvas off the ground to prevent freezing.

END OF TASK

FORDING AND SWIMMING

1. Water obstacles can be forded up to a depth of 60 in. (152.4 cm).
2. No special operation procedures are required for fording or swimming.

END OF TASK

EMERGENCY PROCEDURES

1. The trailers are equipped with runflat tires, allowing the trailer to be towed with one or both tires flat.
2. Do not exceed 30 mph (48.3 km/h) during any runflat operation. Do not exceed 20 mph (32.2 km/h) for more than 30 miles (48.3 km) with both tires flat.
3. A wheel assembly that has been run flat must be inspected and the tire replaced by Field Maintenance as soon as possible.

END OF TASK

END OF WORK PACKAGE

OPERATOR MAINTENANCE
WHEEL AND TIRE ASSEMBLY REPLACEMENT (OLD JACK)

INITIAL SETUP:

Personnel Required
(2)

Equipment Condition
Handbrakes applied
Chock block opposite wheel before removing wheel assembly (WP 0005)
Parked on level surface
Intervehicular cable disconnected from towing vehicle (WP 0005)

WARNING

Wheel assembly weighs approximately 155 lb (70.31 kg). Two people are required to lift wheel assembly. Failure to comply may result in personnel death or injury. Seek medical attention in event of injury.

REMOVAL

WARNING

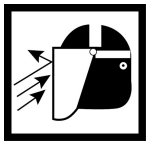

Removing inflated tires could be dangerous to personnel. Removing the outer nuts that hold the rim together while the tire assembly is inflated could result in injury or death. Remove only the inner group of nuts when removing a wheel from the vehicle. Failure to comply may result in personnel death or injury. Seek medical attention in event of injury.

1. Loosen eight lug nuts (Figure 1, Item 9) securing wheel (Figure 1, Item 1) to hub/drum (Figure 1, Item 10).

WARNING

Ensure jack is positioned directly under the torsion arm, next to the wheel being worked on. DO NOT place jack at any other location such as frame rails. Failure to comply may result in personnel death or injury, or equipment damage. Seek medical attention in event of injury.

2. Remove wingscrew (Figure 1, Item 6), lockwasher (Figure 1, Item 5), rectangular washer (Figure 1, Item 4), and jack spacer (Figure 1, Item 3) from trailer frame (Figure 1, Item 2).
3. Position jack spacer (Figure 1, Item 3) and jack (Figure 1, Item 7) under lower shock absorber mount (Figure 1, Item 8).
4. Raise wheel (Figure 1, Item 1) off ground using jack (Figure 1, Item 7).
5. Remove eight loosened wheel lug nuts (Figure 1, Item 9) from wheel (Figure 1, Item 1). Remove wheel from hub/drum (Figure 1, Item 10).

END OF TASK

INSTALLATION

CAUTION

DO NOT reuse a tire that has been run flat without thoroughly inspecting for damage. Failure to comply may result in equipment failure.

1. Install wheel and tire assembly (Figure 1, Item 1) on hub/drum (Figure 1, Item 10).
2. Install eight wheel lug nuts (Figure 1, Item 9) securing wheel (Figure 1, Item 1) on hub/drum (Figure 1, Item 10), and tighten finger tight.
3. Lower (trailer) wheel (Figure 1, Item 1). Remove jack (Figure 1, Item 7) and jack spacer (Figure 1, Item 3).
4. Tighten eight wheel lug nuts (Figure 1, Item 9).
5. Position jack spacer (Figure 1, Item 3) on trailer frame (Figure 1, Item 2), and secure with rectangular washer (Figure 1, Item 4), lockwasher (Figure 1, Item 5), and wingscrew (Figure 1, Item 6).

INSTALLATION - Continued

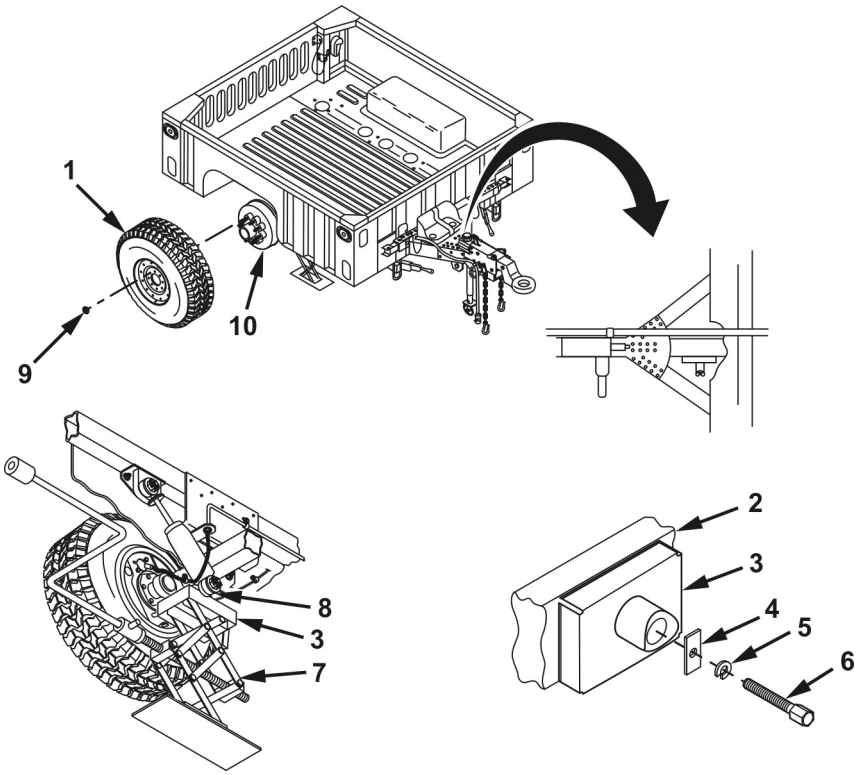

Figure 1. Wheel and Tire Assembly Removal and Installation.

END OF TASK

FOLLOW-ON MAINTENANCE

As soon as possible, notify Field Maintenance to torque lug nuts to 100 lb-ft (136 N•m).

END OF TASK

END OF WORK PACKAGE

OPERATOR MAINTENANCE
WHEEL AND TIRE ASSEMBLY REPLACEMENT (NEW JACK)

INITIAL SETUP:

Personnel Required
(2)

Equipment Condition
Handbrakes applied
Chock block opposite wheel before removing wheel assembly (WP 0005)
Parked on level surface
Intervehicular cable disconnected from towing vehicle (WP 0005)

REMOVAL

WARNING

Wheel assembly weighs approximately 155 lb (70.31 kg). Two people are required to lift wheel assembly. Failure to comply may result in personnel death or injury. Seek medical attention in event of injury.

REMOVAL - Continued

WARNING

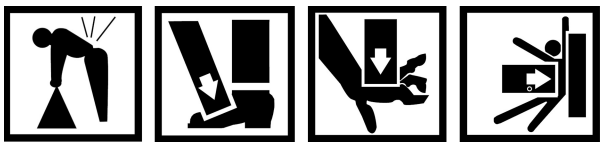

- **DO NOT use 30 M-HVBMI High-Mobility Multipurpose Wheeled Vehicle (HMMWV) jack if components are worn, bent, missing, or not operating properly. Injury to personnel or damage to equipment may result. Failure to comply may result in personnel injury or equipment damage. Seek medical attention in event of injury.**
- **DO NOT modify 30 M-HVBMI HMMWV jack. Modifying 30 M-HVBMI HMMWV jack may cause jack to fail and cause serious injury or death to personnel or damage to equipment. Failure to comply may result in personnel death or injury, or equipment damage. Seek medical attention in event of injury.**
- **Always lift at designated lifting points. Injury to personnel or damage to equipment may result if not lifted properly. Failure to comply may result in personnel injury or equipment damage. Seek medical attention in event of injury.**
- **DO NOT use 30 M-HVBMI HMMWV jack other than to lift the lower shock mount to remove the wheel assembly. Using 30 M-HVBMI HMMWV jack for other than the intended purpose may result in serious injury or death to personnel or damage to equipment. Failure to comply may result in personnel death or injury, or equipment damage. Seek medical attention in event of injury.**
- **DO NOT use 30 M-HVBMI HMMWV jack to support the trailer for long periods of time. Be sure to have new wheel assembly ready to install on hub. Failure to comply may result in personnel injury or equipment damage. Seek medical attention in event of injury.**

1. Remove existing saddle (Figure 1, Item 1) from jack (Figure 1, Item 2).

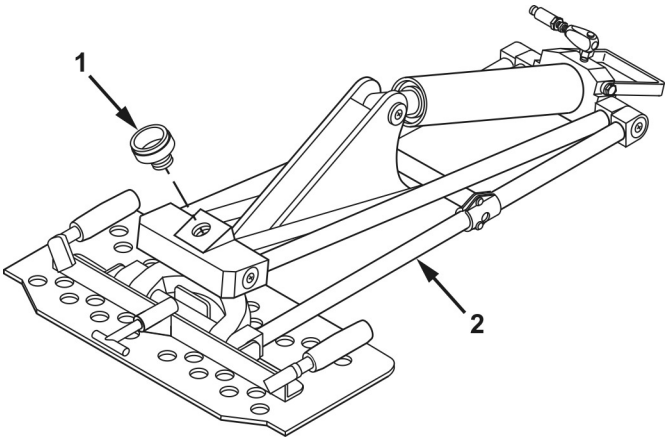

Figure 1. HMMWV Jack and Saddle.

2. Secure trailer adapter (Figure 2, Item 2) to jack (Figure 2, Item 3) with screw (Figure 2, Item 1).

REMOVAL - Continued

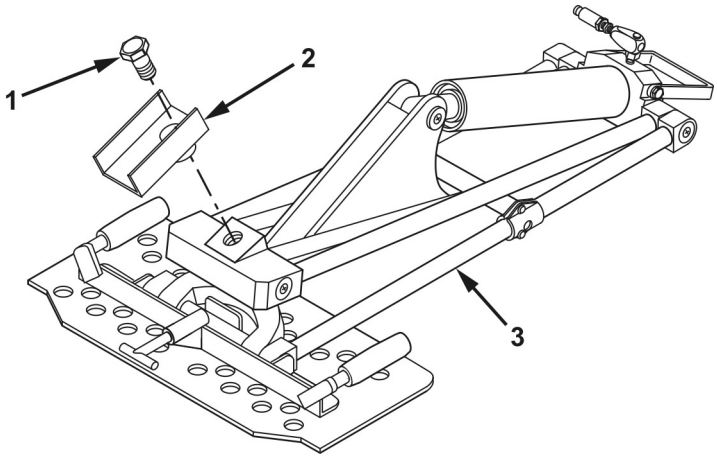

Figure 2. Trailer Jack Adapter.

3. Connect hydraulic hose quick-disconnect (Figure 3, Item 1) to quick-disconnect (Figure 3, Item 2) on jack unit (Figure 3, Item 3).
4. Pull out T-handle (Figure 3, Item 5) to lock jack unit (Figure 3, Item 3) to base plate (Figure 3, Item 4).

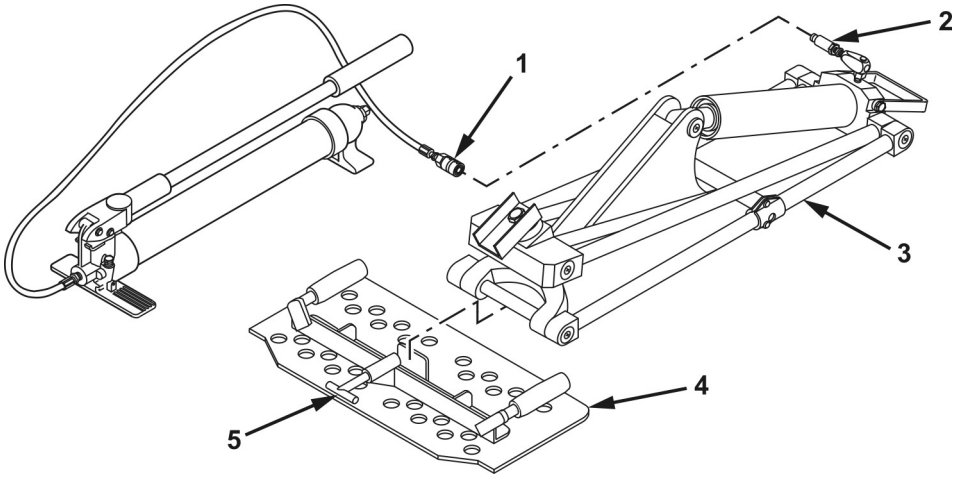

Figure 3. Pump Unit Hydraulic Hose Quick-Disconnect.

REMOVAL - Continued

NOTE

The jack unit and base plate must be parallel with the axle of the vehicle.

5. Position trailer adapter (Figure 4, Item 2) of jack unit (Figure 4, Item 3) under lower shock mounting bolt (Figure 4, Item 1).

WARNING

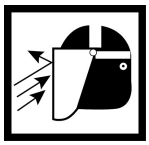

Removing inflated tires could be dangerous to personnel. Removing the outer nuts that hold the rim together while the tire assembly is inflated could result in injury or death. Remove only the inner group of nuts when removing a wheel from the vehicle. Failure to comply may result in personnel death or injury. Seek medical attention in event of injury.

6. Loosen eight lug nuts, but do not remove.

NOTE

Ensure relief valve (Figure 4, Item 6) is in the closed position before attempting lift operation. Closed position on pump unit is clockwise rotation.

7. Grasp pump handle (Figure 4, Item 4) of pump unit (Figure 4, Item 5) and use smooth, full strokes of handle to raise trailer high enough to allow removal of wheel assembly (Figure 4, Item 7) and to install fully inflated replacement wheel assembly.

REMOVAL - Continued

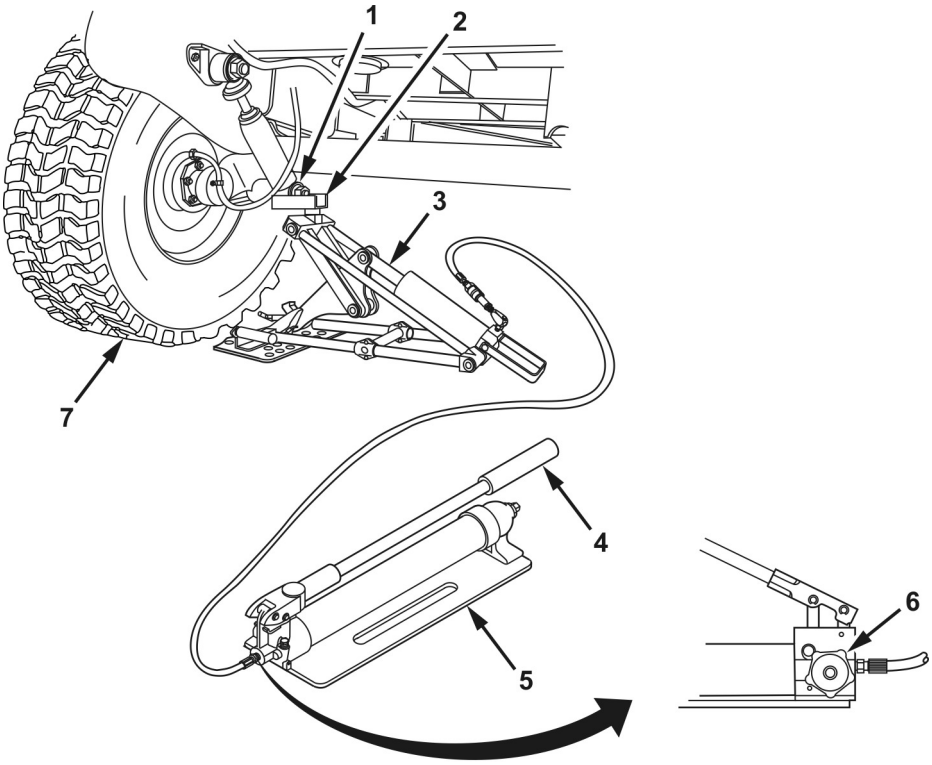

Figure 4. Jack Positioning.

REMOVAL - Continued

WARNING

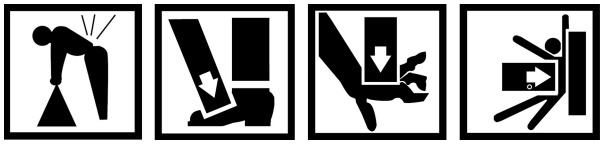

DO NOT use 30 M-HVBMI HMMWV jack to support the trailer for long periods of time. Be sure to have new wheel assembly ready to install on hub. Failure to comply may result in personnel injury or equipment damage. Seek medical attention in event of injury.

CAUTION

DO NOT reuse a tire that has been run flat without thoroughly inspecting for damage. Failure to comply may result in equipment damage.

8. Remove eight lug nuts (Figure 5, Item 3) and wheel assembly (Figure 5, Item 1) from hub (Figure 5, Item 2).

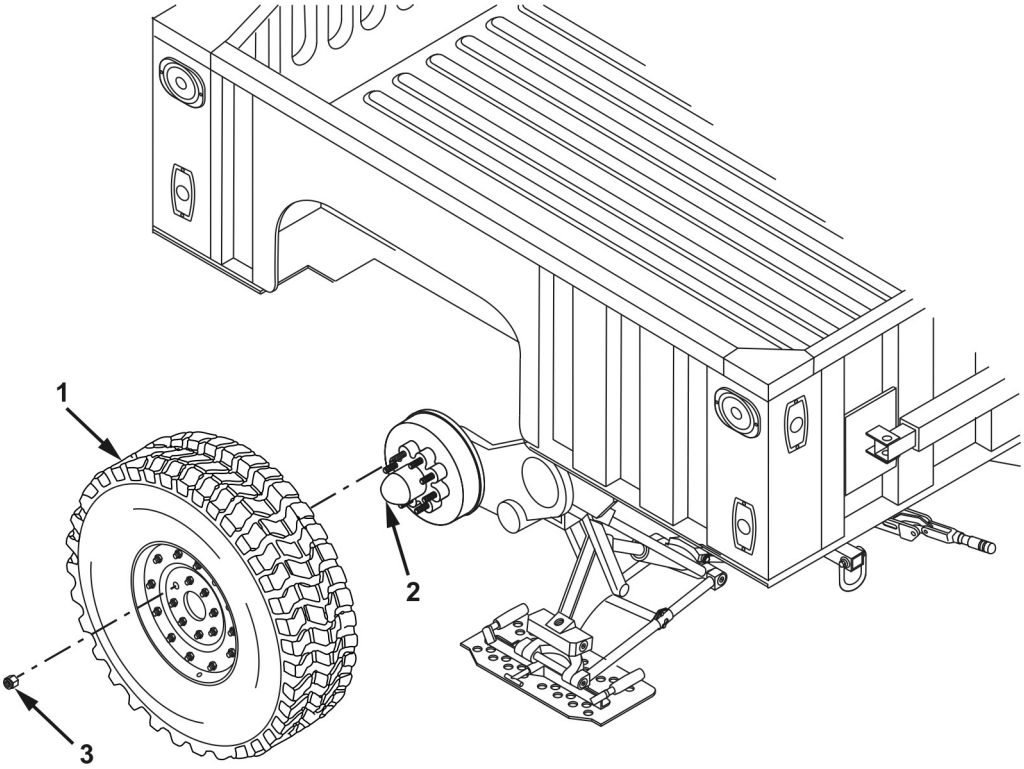

Figure 5. Wheel Assembly Removal.

END OF TASK

INSTALLATION

WARNING

Wheel assembly weighs approximately 155 lb (70.31 kg). Two people are required to lift wheel assembly. Failure to comply may result in personnel death or injury. Seek medical attention in event of injury.

1. Install wheel assembly (Figure 6, Item 1) on hub (Figure 6, Item 2), and secure with eight lug nuts (Figure 6, Item 3).

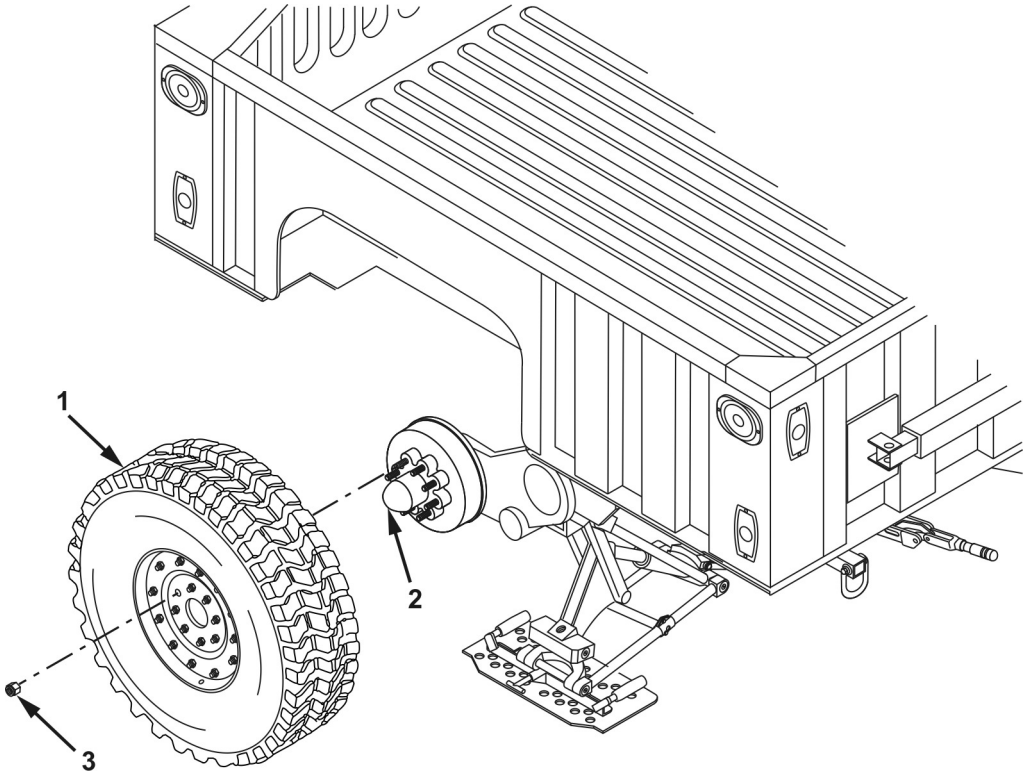

Figure 6. Wheel Assembly Installation.

INSTALLATION - Continued

CAUTION

Ensure all equipment is clear of vehicle before lowering. Damage to equipment may result. Failure to comply may result in equipment damage.

2. Slowly lower jack unit (Figure 7, Item 2) and lower shock mount (Figure 7, Item 1) by turning relief valve (Figure 7, Item 4) counterclockwise on pump unit (Figure 7, Item 3). Remove jack unit from under trailer.

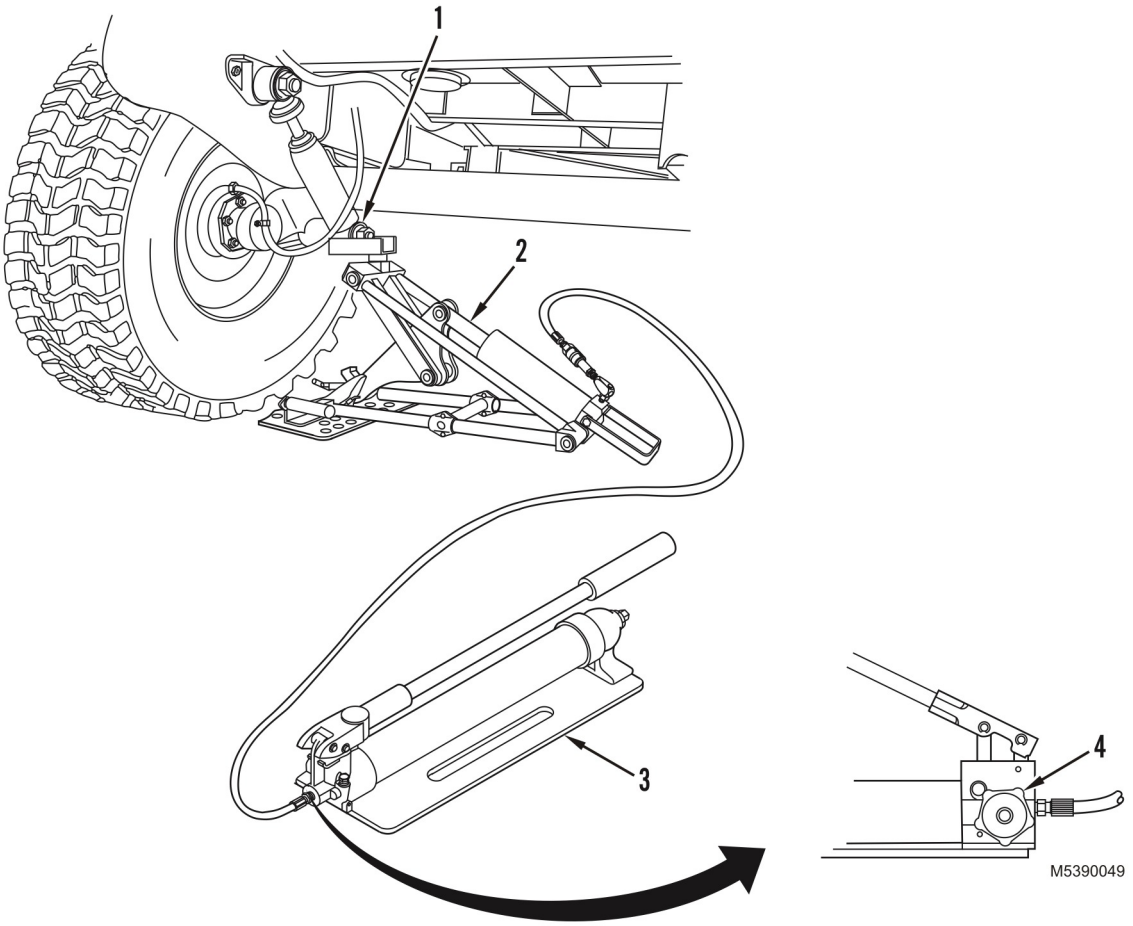

Figure 7. Jack Removal.

INSTALLATION - Continued

3. Tighten eight lug nuts (Figure 8, Item 1) in sequence.

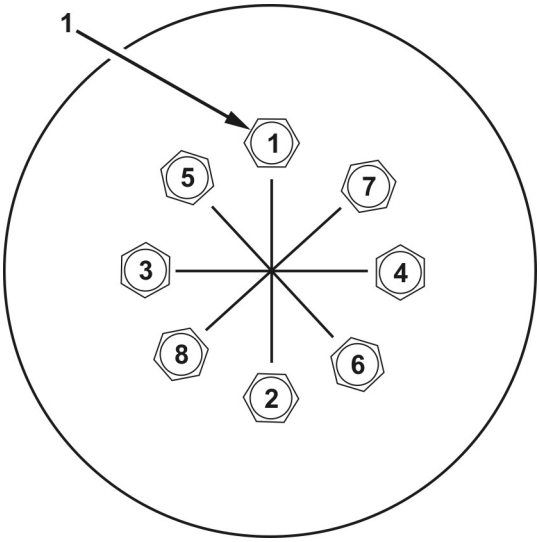

Figure 8. Lug Nut Tightening Sequence.

END OF TASK

FOLLOW-ON MAINTENANCE

As soon as possible, notify Field Maintenance to tighten lug nuts to 100 lb-ft (136 N•m).

END OF TASK

END OF WORK PACKAGE

CHAPTER 3

TROUBLESHOOTING PROCEDURES

OPERATOR MAINTENANCE
OPERATOR TROUBLESHOOTING SYMPTOM INDEX

GENERAL

This work package provides information for identifying and correcting malfunctions that may develop while operating or maintaining the trailer.

This work package lists common malfunctions that may occur and refers you to the proper work package for a troubleshooting procedure.

If you are unsure of an item mentioned, refer to Equipment Description and Data (WP 0002) or the maintenance task where the item is replaced.

Before performing a troubleshooting procedure, read and follow all safety instructions in the Warning Summary at the front of this manual.

This work package cannot list all malfunctions that may occur or all tests, inspections, and corrective actions. If the appropriate symptom is not listed, notify Field Maintenance.

When troubleshooting a malfunction:

1. Locate the symptom or symptoms in the Troubleshooting Index that best describes the malfunction.
2. Refer to the work package where the troubleshooting procedure for the malfunction in question is described. Headings show how each troubleshooting procedure is organized: "Symptom," "Malfunction," and "Corrective Action."
3. Perform each step in the order listed until the malfunction is corrected. Do not perform any maintenance task unless the troubleshooting procedure tells you to do so.

EXPLANATION OF HEADINGS

The headings are defined as follows:

- **SYMPTOM.** A visual or operational indication that something is wrong with the equipment.
- **MALFUNCTION.** Equipment defect that may cause the symptom.
- **CORRECTIVE ACTION.** A procedure to correct the problem.

OPERATOR TROUBLESHOOTING SYMPTOM INDEX

Malfunction/Symptom	Troubleshooting Procedure
1. All Trailer Lamps/LEDs Fail to Light	WP 0011
2. One or More Lamps/LEDs Do Not Operate Properly	WP 0011
3. Dim or Flickering Lamps/LEDs	WP 0011
4. Brakes Will Not Release	WP 0012
5. Handbrakes Will Not Hold Trailer When Engaged	WP 0012
6. Hydraulic Brakes Will Not Operate	WP 0012
7. Handbrake Lever Will Not Operate	WP 0012
8. Abnormal or Uneven Tire Wear	WP 0013
9. Wheel Wobbles	WP 0013
10. Front Support Leg Will Not Operate	WP 0014

OPERATOR TROUBLESHOOTING SYMPTOM INDEX - Continued

Malfunction/Symptom **Troubleshooting Procedure**

11. Trailer Leans to One Side When Empty ..... WP 0015

END OF WORK PACKAGE

FIELD MAINTENANCE
FIELD TROUBLESHOOTING SYMPTOM INDEX

GENERAL

This work package provides information for identifying and correcting malfunctions that may develop while operating or maintaining the trailer.

This work package lists common malfunctions that may occur and refers you to the proper work package for a troubleshooting procedure.

If you are unsure of an item mentioned, refer to Equipment Description and Data (WP 0002) or the maintenance task where the item is replaced.

Before performing a troubleshooting procedure, read and follow all safety instructions in the Warning Summary at the front of this manual.

This work package cannot list all malfunctions that may occur or all tests, inspections, and corrective actions. If a malfunction is not listed or is not corrected by listed corrective actions, notify your supervisor.

When troubleshooting a malfunction:

1. Question the operator to obtain any information that might help determine the cause of the problem.
2. Locate the symptom or symptoms in the Troubleshooting Index that best describes the malfunction.
3. Refer to the work package where the troubleshooting procedure for the malfunction in question is described. Headings show how each troubleshooting procedure is organized: "Symptom," "Malfunction," and "Corrective Action."
4. Perform each step in the order listed until the malfunction is corrected. Do not perform any maintenance task unless the troubleshooting procedure tells you to do so.

EXPLANATION OF HEADINGS

The headings are defined as follows:

- **SYMPTOM.** A visual or operational indication that something is wrong with the equipment.
- **MALFUNCTION.** Equipment defect that may cause the symptom.
- **CORRECTIVE ACTION.** A procedure to correct the problem.

FIELD TROUBLESHOOTING SYMPTOM INDEX

Malfunction/Symptom	Troubleshooting Procedure
1. All Trailer Lamps/LEDs Fail to Light	WP 0016
2. One or More Lamps/LEDs Do Not Operate Properly	WP 0016
3. Dim or Flickering Lamps/LEDs	WP 0016
4. Wheels Out of Line	WP 0017
5. Handbrakes Will Not Operate	WP 0018
6. Hydraulic Brakes Will Not Operate	WP 0018
7. Wheels Will Not Turn	WP 0018
8. Brakes Will Not Hold Trailer When Engaged	WP 0018
9. Brakes Overheat While Driving	WP 0018
10. Abnormal or Uneven Tire Wear	WP 0019

FIELD TROUBLESHOOTING SYMPTOM INDEX - Continued

Malfunction/Symptom	Troubleshooting Procedure
11. Wheel Wobbles	WP 0019
12. Front Support Leg Will Not Operate	WP 0020
13. Trailer Leans to One Side When Empty	WP 0021

END OF WORK PACKAGE

OPERATOR MAINTENANCE
OPERATOR TROUBLESHOOTING – ELECTRICAL

INITIAL SETUP:

Equipment Condition
Parked on level surface
Parking brake set (WP 0005)
Wheels chocked (WP 0005)
Intervehicular cable disconnected from towing vehicle (WP 0005)

TROUBLESHOOTING PROCEDURE

SYMPTOM

ALL TRAILER LAMPS/LEDS FAIL TO LIGHT

MALFUNCTION

Towing Vehicle Lights Will Not Operate

CORRECTIVE ACTION

1. Set light panel switches in towing vehicle to correct positions. Refer to towing vehicle Operator's Manual.
2. If towing vehicle lights still do not work, notify Field Maintenance.

MALFUNCTION

Intervehicular Power Cable Not Properly Connected to Towing Vehicle

CORRECTIVE ACTION

Pull connector out and reset fully into receptacle.

MALFUNCTION

Dirty or Corroded Contacts

CORRECTIVE ACTION

Clean contacts as required.

MALFUNCTION

Broken Wires or Loose Connections

CORRECTIVE ACTION

Notify Field Maintenance.

SYMPTOM

ONE OR MORE LAMPS/LEDS DO NOT OPERATE PROPERLY

MALFUNCTION

Dirty or Corroded Contacts

CORRECTIVE ACTION

Clean contacts as required.

MALFUNCTION

Loose or Broken Wires, or Loose Connection at Affected Light

CORRECTIVE ACTION

Notify Field Maintenance.

SYMPTOM

DIM OR FLICKERING LAMPS/LEDS

MALFUNCTION

Dirty or Corroded Contacts

CORRECTIVE ACTION

Clean contacts as required.

MALFUNCTION

Loose Wires or Connection at Affected Light

CORRECTIVE ACTION

Notify Field Maintenance.

END OF WORK PACKAGE

OPERATOR MAINTENANCE
OPERATOR TROUBLESHOOTING – BRAKES

INITIAL SETUP:

References
WP 0064

Equipment Condition
Parked on level surface
Parking brake set (WP 0005)
Wheels chocked (WP 0005)
Intervehicular cable disconnected from towing vehicle (WP 0005)

TROUBLESHOOTING PROCEDURE

SYMPTOM

BRAKES WILL NOT RELEASE

MALFUNCTION

Handbrake Levers Not Released

CORRECTIVE ACTION

1. Ensure handbrake levers are fully released (raised position).
2. Reset breakaway lever (WP 0005).
3. Notify Field Maintenance.

SYMPTOM

HANDBRAKES WILL NOT HOLD TRAILER WHEN ENGAGED

MALFUNCTION

Handbrake Levers Not Engaged

CORRECTIVE ACTION

1. Fully engage handbrake levers (lowered position).
2. Adjust handbrake levers as necessary (WP 0005).
3. Notify Field Maintenance.

SYMPTOM

HYDRAULIC BRAKES WILL NOT OPERATE

MALFUNCTION

Low Hydraulic Brake Fluid Level in Master Cylinder

CORRECTIVE ACTION

Fill master cylinder to proper level with brake fluid (WP 0064).

MALFUNCTION

Tube and Hose Leaks

CORRECTIVE ACTION

Notify Field Maintenance.

SYMPTOM

HANDBRAKE LEVER WILL NOT OPERATE

MALFUNCTION

Handbrake Lever Seized

CORRECTIVE ACTION

1. Clean lever of dirt and corrosion as required. Lubricate lever in accordance with Lubrication Instructions (WP 0064).
2. Check handbrake lever for damage.
3. Notify Field Maintenance.

END OF WORK PACKAGE

OPERATOR MAINTENANCE
OPERATOR TROUBLESHOOTING – WHEELS AND TIRES

INITIAL SETUP:

Equipment Condition
Parked on level surface
Parking brake set (WP 0005)
Wheels chocked (WP 0005)
Intervehicular cable disconnected from towing vehicle (WP 0005)

TROUBLESHOOTING PROCEDURE

SYMPTOM

ABNORMAL OR UNEVEN TIRE WEAR

MALFUNCTION

Underinflated Tire

CORRECTIVE ACTION

1. Inflate tire to 17 psi (117 kPa).
2. Notify Field Maintenance.

SYMPTOM

WHEEL WOBBLES

MALFUNCTION

Missing or Loose Stud Nuts or Lugnuts

CORRECTIVE ACTION

1. Replace or tighten nuts.
2. Notify Field Maintenance to apply proper torque.

END OF WORK PACKAGE

OPERATOR MAINTENANCE
OPERATOR TROUBLESHOOTING – FRONT SUPPORT LEG

INITIAL SETUP:

Equipment Condition
Parked on level surface
Parking brake set (WP 0005)
Wheels chocked (WP 0005)
Intervehicular cable disconnected from towing vehicle (WP 0005)

TROUBLESHOOTING PROCEDURE

SYMPTOM

FRONT SUPPORT LEG WILL NOT OPERATE

MALFUNCTION

Front Support Leg Will Not Crank Up or Down

CORRECTIVE ACTION

1. Check for dents or other damage to front support leg.
2. Notify Field Maintenance.

END OF WORK PACKAGE

OPERATOR MAINTENANCE
OPERATOR TROUBLESHOOTING – SUSPENSION

INITIAL SETUP:

Equipment Condition
Parked on level surface
Parking brake set (WP 0005)
Wheels chocked (WP 0005)
Intervehicular cable disconnected from towing vehicle (WP 0005)

TROUBLESHOOTING PROCEDURE

SYMPTOM

TRAILER LEANS TO ONE SIDE WHEN EMPTY

MALFUNCTION

Underinflated Tire

CORRECTIVE ACTION

1. Check tire pressure.
2. Inflate tire to 17 psi (117 kPa).

MALFUNCTION

Shock Absorber Extension Rods Are Uneven

CORRECTIVE ACTION

Notify Field Maintenance if exposed extension rods are not the same length.

MALFUNCTION

Leaking Shock Absorber

CORRECTIVE ACTION

Notify Field Maintenance.

END OF WORK PACKAGE

FIELD MAINTENANCE
FIELD TROUBLESHOOTING – ELECTRICAL

INITIAL SETUP:

Tools and Special Tools
Tool Kit, General Mechanic's (WP 0096, Table 1, Item 1)

References
WP 0029
WP 0030
WP 0031
WP 0033

Equipment Condition
Parking brake set (WP 0005)
Wheels chocked (WP 0005)
Intervehicular cable disconnected from towing vehicle (WP 0005)

TROUBLESHOOTING PROCEDURE

SYMPTOM

ALL TRAILER LAMPS/LEDS FAIL TO LIGHT

MALFUNCTION

Broken Wires

CORRECTIVE ACTION

Tighten loose connections. Repair as necessary (WP 0033).

MALFUNCTION

Wiring Harness Has Bare Spots

CORRECTIVE ACTION

Repair chassis wiring harness as necessary (WP 0033).

SYMPTOM

ONE OR MORE LAMPS/LEDS DO NOT OPERATE PROPERLY

MALFUNCTION

Defective Lamp Bulbs/LEDs

CORRECTIVE ACTION

Replace defective lamp bulbs/LEDs (WP 0029), (WP 0030), or (WP 0031).

MALFUNCTION

Loose or Broken Wires

CORRECTIVE ACTION

Tighten loose connections. Repair as necessary (WP 0033).

MALFUNCTION

Loose, Dirty, or Corroded Cable Connectors

CORRECTIVE ACTION

1. Clean terminal assemblies and electrical contacts.
2. Disconnect the intervehicular cable from the towing vehicle (WP 0005).
3. Disconnect lamp housing (roadside, curbside, front, or rear).
4. Use multimeter to check for continuity of each electrical wire in wiring harness and the intervehicular cable.

SYMPTOM

DIM OR FLICKERING LAMPS/LEDS

MALFUNCTION

Loose or Broken Wires

CORRECTIVE ACTION

Tighten loose connections. Repair as necessary (WP 0033).

MALFUNCTION

Loose, Dirty, or Corroded Cable Connectors

CORRECTIVE ACTION

1. Clean terminal assemblies and electrical contacts.
2. Use multimeter to check for continuity of each electrical wire in wiring harness and the intervehicular cable.

END OF WORK PACKAGE

FIELD MAINTENANCE
FIELD TROUBLESHOOTING – AXLE

INITIAL SETUP:

Tools and Special Tools
Tool Kit, General Mechanic's (WP 0096, Table 1, Item 1)

References
WP 0007
WP 0008
WP 0035
WP 0046

Equipment Condition
Parked on level surface
Parking brake set (WP 0005)
Wheels chocked (WP 0005)
Intervehicular cable disconnected from towing vehicle (WP 0005)

TROUBLESHOOTING PROCEDURE

SYMPTOM

WHEELS OUT OF LINE

MALFUNCTION

Wheel Damaged

CORRECTIVE ACTION

Replace wheel assembly (WP 0007) or (WP 0008).

MALFUNCTION

Wheel Bearing Defective

CORRECTIVE ACTION

Replace wheel bearing (WP 0046).

MALFUNCTION

Trailing Arm Damaged

CORRECTIVE ACTION

Replace axle assembly (WP 0035).

END OF WORK PACKAGE

FIELD MAINTENANCE
FIELD TROUBLESHOOTING – BRAKES

INITIAL SETUP:

Tools and Special Tools
Tool Kit, General Mechanic's (WP 0096, Table 1, Item 1)

References
WP 0036
WP 0037
WP 0038
WP 0040
WP 0041

Equipment Condition
Parked on level surface
Parking brake set (WP 0005)
Wheels chocked (WP 0005)
Intervehicular cable disconnected from towing vehicle (WP 0005)

TROUBLESHOOTING PROCEDURE

SYMPTOM

HANDBRAKES WILL NOT OPERATE

MALFUNCTION

Handbrake Levers Will Not Operate

CORRECTIVE ACTION

Replace handbrake lever assembly (WP 0036).

MALFUNCTION

Handbrake Cable Will Not Operate

CORRECTIVE ACTION

Replace brake cable and defective parts (WP 0037).

MALFUNCTION

Handbrakes Will Not Hold When Engaged

CORRECTIVE ACTION

1. Apply brakes and check brake action.
2. Adjust handbrake levers (WP 0005).
3. Inspect brake assembly (WP 0038).
4. Replace defective parts (WP 0038).
5. Perform brake adjustment (WP 0038).

SYMPTOM

HYDRAULIC BRAKES WILL NOT OPERATE

MALFUNCTION

Leaking Brake Lines or Hoses

CORRECTIVE ACTION

1. Tighten fittings or replace brake lines and hoses as required. Bleed brake system (WP 0041).
2. Check hydraulic brake operation. Adjust service brakes as required (WP 0038).
3. Inspect brake assemblies. Replace defective parts (WP 0038).

SYMPTOM

WHEELS WILL NOT TURN

MALFUNCTION

Brakes Will Not Release

CORRECTIVE ACTION

1. Adjust handbrake cable tension as required (WP 0005).
2. Inspect brake assemblies and cables. Replace defective parts (WP 0036), (WP 0037), or (WP 0038).

SYMPTOM

BRAKES WILL NOT HOLD TRAILER WHEN ENGAGED

MALFUNCTION

Brakes Not Properly Adjusted

CORRECTIVE ACTION

Adjust brakes as required (WP 0005) or (WP 0038).

SYMPTOM

BRAKES OVERHEAT WHILE DRIVING

MALFUNCTION

Handbrake Lever Not Fully Released

CORRECTIVE ACTION

Release handbrake lever. Adjust handbrake lever as required (WP 0005).

MALFUNCTION

Breakaway Lever in Up Position

CORRECTIVE ACTION

1. Reset breakaway lever to down and locked position (WP 0005).
2. If breakaway lever is damaged, replace damaged parts (WP 0040).

MALFUNCTION

Brakes Not Properly Adjusted

CORRECTIVE ACTION

Adjust brakes as required (WP 0005) or (WP 0038).

END OF WORK PACKAGE

FIELD MAINTENANCE
FIELD TROUBLESHOOTING – WHEELS AND TIRES

INITIAL SETUP:

Tools and Special Tools
Tool Kit, General Mechanic's (WP 0096, Table 1, Item 1)

References
WP 0007
WP 0008
WP 0035
WP 0046

Equipment Condition
Parked on level surface
Parking brake set (WP 0005)
Wheels chocked (WP 0005)
Intervehicular cable disconnected from towing vehicle (WP 0005)

TROUBLESHOOTING PROCEDURE

SYMPTOM

ABNORMAL OR UNEVEN TIRE WEAR

MALFUNCTION

Wheel Damaged

CORRECTIVE ACTION

Replace damaged wheel assembly (WP 0007) or (WP 0008).

MALFUNCTION

Wheel Bearing Damaged or Improperly Adjusted

CORRECTIVE ACTION

1. Replace damaged wheel bearings (WP 0046).
2. Adjust wheel bearings (WP 0046).

MALFUNCTION

Trailing Arm Bent/Misaligned

CORRECTIVE ACTION

Replace axle (WP 0035).

SYMPTOM

WHEEL WOBBLES

MALFUNCTION

Wheel Damaged

CORRECTIVE ACTION

Replace damaged wheel assembly (WP 0007) or (WP 0008).

MALFUNCTION

Wheel Bearings Damaged or Improperly Adjusted

CORRECTIVE ACTION

1. Replace damaged wheel bearings (WP 0046).
2. Adjust wheel bearings (WP 0046).

END OF WORK PACKAGE

FIELD MAINTENANCE
FIELD TROUBLESHOOTING – FRONT SUPPORT LEG AND CASTER

INITIAL SETUP:

Tools and Special Tools
Tool Kit, General Mechanic's (WP 0096, Table 1, Item 1)

References
WP 0049

Equipment Condition
Parked on level surface
Parking brake set (WP 0005)
Wheels chocked (WP 0005)
Intervehicular cable disconnected from towing vehicle (WP 0005)

TROUBLESHOOTING PROCEDURE

SYMPTOM

FRONT SUPPORT LEG WILL NOT OPERATE

MALFUNCTION

Dirt or Other Obstructions Prevent Proper Operation

CORRECTIVE ACTION

Clean dirt or obstruction from shaft and housing.

MALFUNCTION

Front Support Leg Inner or Outer Shaft Tubes Damaged

CORRECTIVE ACTION

Replace front support leg (WP 0049).

MALFUNCTION

Hand Crank Moves Freely But Front Support Leg Will Not Raise or Lower Trailer Tongue

CORRECTIVE ACTION

Replace front support leg (WP 0049).

END OF WORK PACKAGE

FIELD MAINTENANCE
FIELD TROUBLESHOOTING – SUSPENSION

INITIAL SETUP:

Tools and Special Tools
Tool Kit, General Mechanic's (WP 0096, Table 1, Item 1)

References
WP 0035
WP 0050

Equipment Condition
Parked on level surface
Parking brake set (WP 0005)
Wheels chocked (WP 0005)
Intervehicular cable disconnected from towing vehicle (WP 0005)

TROUBLESHOOTING PROCEDURE

SYMPTOM

TRAILER LEANS TO ONE SIDE WHEN EMPTY

MALFUNCTION

Leaking Shock Absorber

CORRECTIVE ACTION

Replace shock absorber (WP 0050).

MALFUNCTION

Axle Damaged

CORRECTIVE ACTION

1. If the length of exposed extension rod on either shock absorber measures less than 2.25 in. (69.85 mm), replace the axle (WP 0035).
2. If the difference between the lengths of the two exposed extension rods is 0.75 in. (19.1 mm) or greater, replace the axle (WP 0035).

END OF WORK PACKAGE

CHAPTER 4

OPERATOR PMCS INSTRUCTIONS

OPERATOR MAINTENANCE
OPERATOR/CREW PREVENTIVE MAINTENANCE CHECKS AND SERVICES (PMCS) INTRODUCTION

GENERAL

To ensure that the M1101, M1102, or Chassis Trailers are ready for operation at all times, it must be inspected on a regular basis so that defects may be found before they result in serious damage, equipment failure, or injury to personnel. Table 1 contains systematic instructions on inspections, adjustments, and corrections to be performed by Operator/Crew Maintenance to keep your equipment in good operating condition and ready for its primary mission.

EXPLANATION OF TABLE ENTRIES

1. **Item Number (Item No.) Column.** Numbers in this column are for reference. When completing DA Form 2404 or DA Form 5988-E (Equipment Inspection and Maintenance Worksheet), include the item number for the check/service indicating a fault. Item numbers also appear in the order that you must perform checks and services for the interval listed.
2. **Interval Column.** This column tells you when you must do the procedure listed in the procedure column.
   a. *Before* procedures must be done before you operate or use the equipment for its intended mission.
   b. *During* procedures must be done during the time you are operating or using the equipment for its intended mission.
   c. *After* procedures must be done immediately after you have operated or used the equipment.
   d. *Weekly* procedures must be done each week.
3. **Item To Check/Service Column.** This column provides the Item to be checked or serviced.

NOTE

The WARNINGs and CAUTIONs appearing in your PMCS table should always be observed. WARNINGs and CAUTIONs appear before applicable procedures. These WARNINGs and CAUTIONs must be observed to prevent serious injury to yourself and others or prevent your equipment from being damaged.

4. **Procedure Column.** This column gives the procedure you must perform to check or service the Item listed in the Item To Check/Service column to know if the equipment is ready or available for its intended mission or for operation. You must perform the procedure at the time stated in the interval column.
5. **Equipment Not Ready/Available If: Column**. Information in this column tells you what faults will keep your equipment from being capable of performing its primary mission. If you make check and service procedures that show faults listed in this column, do not operate the equipment. Follow standard operating procedures for maintaining the equipment or reporting equipment failure.

GENERAL PMCS PROCEDURES

Always perform PMCS in the same order so it gets to be a habit. Once you've had some practice, you'll spot anything wrong in a hurry. If the M1101, M1102, or Chassis Trailers do not perform as required, refer to the appropriate troubleshooting task in Operator/Crew Troubleshooting Procedures (WP 0009).

If anything looks wrong and you can't fix it, write it on your DA Form 2404, or DA Form 5988-E. If you find something seriously wrong, IMMEDIATELY report it to Field Maintenance.

Before performing preventive maintenance, read all the checks required for the applicable interval and prepare all tools needed to make all checks. Have several clean rags handy. Perform ALL inspections at the applicable interval.

GENERAL PMCS PROCEDURES - Continued

1. **Keep It Clean.** Dirt, grease, oil, and debris get in the way and may cover up a serious problem. Clean as you work and as needed. Use cleaning solvent on all metal surfaces. Use dishwashing compound and water when you clean rubber, plastic, and painted surfaces.
2. **Rust and Corrosion.** Check metal parts of M1101, M1102, and Chassis Trailers and frame for rust and corrosion. If any bare metal or corrosion exists, clean and apply a light coating of lubricating oil. Report it to your supervisor.
3. **Bolts, Nuts, and Screws.** Check bolts, nuts, and screws for obvious looseness, missing, bent, or broken condition. You can't try them all with a tool, of course, but look for chipped paint, bare metal, or rust around bolt heads. If you find one you think is loose, report it to your supervisor.
4. **Welds.** Look for loose or chipped paint, rust, or gaps where parts are welded together. If you find a bad weld, report it to your supervisor.
5. **Electric Wires and Connectors.** Look for cracked or broken insulation, bare wires, and loose or broken connectors. Tighten loose connectors and ensure that the wires are in good condition.
6. **Air and Hydraulic Hoses and Lines.** Look for wear, damage, and signs of leaks. Ensure that clamps and fittings are tight. Wet spots indicate leaks, of course, but a stain around a fitting or connector can also mean a leak. If a leak comes from a loose fitting or connector, tighten it. If something is broken or worn out, report it to your supervisor.
7. **Fluid Leakage.** It is necessary for you to know how fluid leakage affects the status of your M1101, M1102, and Chassis Trailers. The following are definitions of the types/classes of leakage you need to know to be able to determine whether or not the M1101, M1102, and Chassis Trailers are mission-capable. Learn and be familiar with them, and remember - when in doubt, notify your supervisor.

CAUTION

Equipment operation is allowable with minor (Class I or II) leakage. Fluid levels in an item/system affected with such leakage must be checked more frequently than required in PMCS. Parts without fluid will stop working or may be damaged. When in doubt, notify your supervisor. IMMEDIATELY report Class III leaks to Field Maintenance.

NOTE

Use a drain pan to capture any draining or leaking fluid. Refer to local procedures and plans for preventing and responding to fluid spills or leaks. Comply with local regulations when disposing of clean up material and leaked and spilled fluids.

Leakage Definitions for Operator/Crew for PMCS	
Class I	Seepage of fluid (as indicated by wetness or discoloration) not great enough to form drops.
Class II	Leakage of fluid great enough to form drops, but not enough to cause drops to drip from the Item being inspected.
Class III	Leakage of fluid great enough to form drops that fall from the Item being inspected.

END OF WORK PACKAGE

OPERATOR MAINTENANCE
OPERATOR PREVENTIVE MAINTENANCE CHECKS AND SERVICES (PMCS)

INITIAL SETUP:

References
AR 385-10
WP 0005

Table 1. Operator Preventive Maintenance Checks and Services (PMCS).

ITEM NO.	INTERVAL	ITEM TO BE CHECKED OR SERVICED	PROCEDURE	EQUIPMENT NOT READY/ AVAILABLE IF:
			NOTE • Review all Warnings, Cautions, and Notes before performing PMCS. • Perform all PMCS checks if: a. You are the assigned operator but have not operated the trailer since the last weekly checks. b. You are operating the trailer for the first time.	
1	Before	Lunette Ring	**WARNING** **Keep hands away from lunette ring during coupling/uncoupling operations. Failure to comply may result in personnel injury. Seek medical attention in the event of injury.** Check lunette for secure mounting or obvious damage.	
2	Before	Brake Actuator Assembly	1. Inspect area where front roller pin goes through brake actuator housing for damage and abnormal wear. 2. Check that breakaway lever is in down position. If lever is not fully released, brakes will drag, heat up, and overheat. 3. Inspect master pin that goes through middle rear area of brake actuator for signs of wear or damage.	Damage is evident.

Table 1. Operator Preventive Maintenance Checks and Services (PMCS) - Continued.

ITEM NO.	INTERVAL	ITEM TO BE CHECKED OR SERVICED	PROCEDURE	EQUIPMENT NOT READY/ AVAILABLE IF:
			4. Ensure that mounting nuts and bolts securely fasten brake actuator assembly to drawbar.	Nuts and bolts missing or damaged.
			5. Visually check brake breakaway cable, lever, and spring clip for damage and missing parts.	Cable, lever, or spring clip is missing or damaged.
			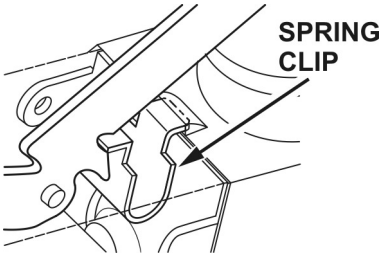 Figure 1. Spring Clip.	
3	Before	Front Support Leg	**WARNING** • **Drawbar is heavy – up to 420 lb (190.5 kg) loaded tongue weight. Use front support (landing) leg crank to raise and lower trailer drawbar. If support leg assembly is inoperative, use suitable lifting device to lift the drawbar. If a suitable lifting device is not available, remove load from trailer and use four or more people to lift drawbar. Failure to comply may result in personnel death or injury, or equipment damage. Seek medical attention in event of injury.** • **DO NOT move the trailer laterally (push/pull) using the front support leg as a third wheel or trailer dolly. Mounting bracket or front support leg may fail. Failure to comply may result in personnel death or injury, or equipment damage. Seek medical attention in event of injury.** Check front support leg for damage, missing parts, and proper operation. Check that caster moves freely and handle can be cranked to raise and lower trailer.	

Table 1. Operator Preventive Maintenance Checks and Services (PMCS) - Continued.

ITEM NO.	INTERVAL	ITEM TO BE CHECKED OR SERVICED	PROCEDURE	EQUIPMENT NOT READY/ AVAILABLE IF:
4	Before	Handbrake Lever (Roadside)	Check handbrake lever for damage or missing parts. Check that the handle can be engaged and released. Adjust as necessary (WP 0005).	Damage is evident or handbrake fails to operate correctly.
5	Before	Tires (Roadside)	Visually check for underinflated and unserviceable tires. Check tires for leaks, cuts, gouges, cracks, and bulges. Remove all penetrating objects.	Any tire is missing or unserviceable. Tires have leaks, cuts, gouges, cracks, or bulges that would result in tire failure during operation.
6	Before	Tires (Curbside)	Visually check for underinflated and unserviceable tires. Check tires for leaks, cuts, gouges, cracks, and bulges. Remove all penetrating objects.	Any tire is missing or unserviceable. Tires have leaks, cuts, gouges, cracks, or bulges that would result in tire failure during operation.
7	Before	Handbrake Lever (Curbside)	Check handbrake lever for damage or missing parts. Check that the handle can be engaged and released. Adjust as necessary (WP 0005).	Damage is evident or handbrake fails to operate correctly.
8	Before	Intervehicular Cable	Connect intervehicular cable to towing vehicle (WP 0005). Operate towing vehicle light switch through all settings, and check trailer lights.	Trailer lights do not operate properly.
9	After	Brake System	**WARNING** **Brake hub (grease cap)/drum and associated components may become hot during operations that require frequent or continuous braking. Use extreme caution when inspecting brakes. Severe burns may result. Failure to comply may result in personnel injury. Seek medical attention in event of injury.** **NOTE** A hub/wheel assembly that is significantly cooler or hotter than the other may indicate improperly adjusted brakes. An abnormally cool condition may indicate an inoperative brake. Inspect each hub/wheel assembly. Check for a hub/wheel assembly that is significantly cooler or hotter than the other. Immediately report any significant temperature variation to Field Maintenance.	Brake hub/wheel assembly is abnormally cold or hot.

Table 1. Operator Preventive Maintenance Checks and Services (PMCS) - Continued.

ITEM NO.	INTERVAL	ITEM TO BE CHECKED OR SERVICED	PROCEDURE	EQUIPMENT NOT READY/ AVAILABLE IF:
10	After	Rear Stabilizers	Inspect rear stabilizers for damage. Ensure that hinge on flex plate can be rotated and sections slide up and down when pin is removed.	Damage is evident or parts are missing.
11	After	Shock Absorber	Inspect shock absorbers for leaks, missing hardware, and damage.	Any leaks are evident, mounting hardware is missing, damage is evident.
12	After	Safety Chains	Inspect safety chains for damage or missing parts.	Damage is evident or parts are missing.
13	Weekly	Wheel Assemblies	Check lugnuts and stud nuts to ensure that they are not loose or missing. If any are loose, tighten.	Three or more lugnuts or stud nuts are missing.
14	Weekly	Brake Actuator Assembly	Inspect brake lines and hoses for missing clamps, cracks, leaks, loose connections, or broken lines. Tighten loose connections.	Any leaks are found.
15	Weekly	Lights, Reflectors, and Wiring	**NOTE** Vehicle operation with damaged or inoperable trailer lights may violate AR 385-10. 1. Visually inspect lights and reflectors for missing or broken parts and loose connectors. If any connectors are loose, tighten. 2. Inspect wiring harness and intervehicular cable for exposed, frayed, or damaged wiring or missing mounting hardware.	Damage is evident.
16	Weekly	Trailer Body	Visually inspect trailer body including inserts that hold bow supports.	Extensive damage is evident.

END OF WORK PACKAGE

CHAPTER 5

FIELD PMCS INSTRUCTIONS

FIELD MAINTENANCE
FIELD PREVENTIVE MAINTENANCE CHECKS AND SERVICES (PMCS) INTRODUCTION

GENERAL

Preventive Maintenance Checks and Services (PMCS) means systematic caring, inspecting, and servicing of equipment to keep it in good condition and to prevent breakdowns. As the provider of field-level checks and services, your mission is to:

- Perform your PMCS at the correct intervals as indicated. Always do your PMCS in the same order, so it gets to be a habit. Once you have had some practice, you will quickly spot anything wrong.
- Do your QUARTERLY PMCS every 3 months. Pay attention to Warnings, Cautions, and Notes.
- Do your SEMIANNUAL PMCS every 6 months. Pay attention to Warnings, Cautions, and Notes.
- Use DA Form 2404 (Equipment Inspection and Maintenance Worksheet) or DA Form 5988-E to record any faults that you discover during the quarterly and semiannual PMCS, unless you can fix them. You DO NOT need to record faults that you fix.

EXPLANATION OF TABLE ENTRIES

1. **Item Number (Item No.) Column.** Numbers in this column are for reference. When completing DA Form 2404 (Equipment Inspection and Maintenance Worksheet) or DA Form 5988-E, include the Item number of check/service indicating a fault. Item numbers also appear in the order that you must perform checks and services for the interval listed.
2. **Interval Column.** This column tells you when you must perform the procedure in the Procedure column.
   a. *Before* procedures must be done before you operate or use the equipment for its intended mission.
   b. *After* procedures must be done immediately after you have operated or used the equipment.
   c. *Weekly* procedures must be done once each week.
   d. *Semiannual* procedures must be done once every six months.
3. **Item To Be Checked or Serviced Column.** This column identifies the Item to be checked or serviced.

NOTE

The WARNING and CAUTIONS appearing in your PMCS table should always be observed. WARNINGS and CAUTIONS appear before applicable procedures. These WARNINGS and CAUTIONS must be observed to prevent serious injury to yourself and others or to prevent your equipment from being damaged.

4. **Procedure Column.** This column gives the procedure you must perform to check or service the Item listed in the Item To Be Checked or Serviced column to know if the equipment is ready or available for its intended mission or for operation. You must perform the procedure at the time stated in the Interval column.
5. **Equipment Not Ready/Available If: Column.** Information in this column tells you what faults will keep your equipment from being capable of performing its primary mission. If you make check and service procedures that show faults listed in this column, do not operate the equipment. Follow standard operating procedures for maintaining the equipment or reporting equipment failure.

GENERAL PMCS PROCEDURES

1. The Field PMCS work package lists checks and services required to keep the trailer in good operating condition. It is set up so you can make your checks as you walk around the trailer.
2. When you do your PMCS, you will always need a rag or two. Following are checks that are common to the entire trailer:
   a. **Keep It Clean.** Dirt, grease, oil, and debris may cover up a serious problem. Clean as you work and as needed. Use cleaning solvent (WP 0095, Table 1, Item 6) on all metal surfaces. Use detergent (WP 0095, Table 1, Item 9) and water on rubber, plastic, and painted surfaces.

GENERAL PMCS PROCEDURES - Continued

b. **Rust and Corrosion.** Check trailer body and frame for rust and corrosion. If any bare metal or corrosion exists, clean and apply a thin coat of light oil.
c. **Bolts, Nuts, and Screws.** Ensure that none are loose, missing, bent, or broken. Tighten any that are loose.
d. **Welds.** Look for loose or chipped paint, rust, or cracks where parts are welded together. If you find a bad weld, notify your supervisor.
e. **Wiring Harness, Wires, and Connectors.** Inspect for cracked or broken insulation, bare wires, and loose or broken connectors. Tighten loose connectors.
f. **Hydraulic Brake Lines, Hoses, and Fittings.** Inspect for wear, damage, and leaks. Ensure that fittings are tight. If a leak originates from a loose fitting, tighten it. If a component is broken or worn, correct problem.

3. When you check for "operating condition," you look at the component to see if it is serviceable.

CLEANING

WARNING

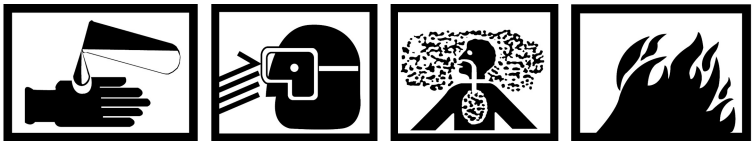

- **Solvent cleaning compound MIL-PRF-680 may be irritating to the eyes and skin. Wear protective gloves and goggles. First aid for skin contact: remove contaminated clothing. Wash skin thoroughly with soap and water. First aid for eye contact: flush with water for 15 minutes or until irritation subsides. If symptoms persist, seek medical attention. Failure to comply may result in personnel death or injury. Seek medical attention in event of injury.**
- **Use solvent cleaning compound MIL-PRF-680 in a well-ventilated area. Use respirator as needed. Accidental ingestion can cause irritation of digestive tract and respiratory tract. May cause lung and central nervous system damage. Can be fatal if swallowed. Inhalation of high/ massive concentrations can cause coma or be fatal. First aid for ingestion: DO NOT induce vomiting. Seek immediate medical attention. First aid for inhalation: move to fresh air. If not breathing, provide artificial respiration. If symptoms persist, seek medical attention. Failure to comply may result in personnel death or injury. Seek medical attention in event of injury.**
- **MIL-PRF-680 solvent is combustible; DO NOT use or store near heat, sparks, flame, or other ignition sources. Use mechanical ventilation whenever product is used in a confined space, heated above ambient temperatures, or agitated. Keep container sealed when not in use. Failure to comply may result in personnel death or injury. Seek medical attention in event of injury.**
- **Improper cleaning methods and use of unauthorized cleaning liquids or solvents can injure personnel and damage equipment. Failure to comply may result in personnel death or injury. Seek medical attention in event of injury.**
- **Cloths or rags saturated with solvent cleaning compound must be disposed of in accordance with authorized facility procedures. Failure**

CLEANING - Continued

to comply may result in personnel death or injury. Seek medical attention in event of injury.

CAUTION

- **DO NOT allow cleaning compounds to come into contact with rubber, leather, vinyl, or canvas materials. Failure to comply may result in equipment damage.**
- **DO NOT allow water to enter the master cylinder. Damage to the brake system will result. Failure to comply may result in equipment damage.**
- **Use only those authorized cleaning solvents or agents listed in (WP 0095). Failure to comply may result in equipment damage.**

1. Cleaning is an AFTER operation service performed to maintain the trailer in a state of readiness. Facilities and material available for cleaning may vary in different operating conditions. However, trailer must be kept as clean as possible as available cleaning equipment, materials, and tactical situations permit.
2. Prior to using water to clean, ensure master cylinder fill cap is tightened.
3. Allow wet brakes to dry before using trailer.

FLUID LEAKAGE

It is necessary for you to know how fluid leakage affects the status of your trailer. The following are definitions of the types/classes of leakage you need to know to be able to determine whether or not the trailer is mission-capable. Learn and be familiar with them, and remember - when in doubt, notify your supervisor.

Wetness around seals, gaskets, fittings, or connections indicates leakage. A stain also denotes leakage. Use the following leakage classes to determine the status of the trailer. When in doubt, notify your supervisor.

CAUTION

Equipment operation is allowable with minor (Class I or II) leakage. Fluid levels in an item/system affected with such leakage must be checked more frequently than required in PMCS. Parts without fluid will stop working or may be damaged. When in doubt, notify your supervisor. IMMEDIATELY report Class III leaks to Field Maintenance.

NOTE

Use a drain pan to capture any draining or leaking fluid. Refer to local procedures and plans for preventing and responding to fluid spills or leaks. Comply with local regulations when disposing of clean up material and leaked and spilled fluids.

Leakage Definitions for Operator/Crew for PMCS	
Class I	Seepage of fluid (as indicated by wetness or discoloration) not great enough to form drops.
Class II	Leakage of fluid great enough to form drops, but not enough to cause drops to drip from the Item being inspected.
Class III	Leakage of fluid great enough to form drops that fall from the Item being inspected.

END OF WORK PACKAGE

FIELD MAINTENANCE
FIELD PREVENTIVE MAINTENANCE CHECKS AND SERVICES (PMCS)

INITIAL SETUP:

References
WP 0005
WP 0007
WP 0008
WP 0034
WP 0038
WP 0042
WP 0043
WP 0045

References (cont.)
WP 0046
WP 0049
WP 0050
WP 0053
WP 0059
WP 0060
WP 0061
WP 0064

Table 1. Field Preventive Maintenance Checks and Services (PMCS).

ITEM NO.	INTERVAL	ITEM TO BE CHECKED OR SERVICED	PROCEDURE	EQUIPMENT NOT READY/ AVAILABLE IF:
1	Semiannual	Lunette	1. Measure lunette ring thickness. If measurement is less than 0.63 in. (1.59 cm), replace lunette (WP 0043).	Lunette ring thickness is less than 0.63 in. (1.59 cm).
			2. Inspect master pin slotted hole for wear. If hole length exceeds 2.313 in. (5.88 cm) or hole width exceeds 1.20 in. (3.04 cm), replace lunette (WP 0043).	Wear limits are exceeded.
2	Semiannual	Brake Actuator Assembly	1. Inspect master pin hole for wear. If hole diameter exceeds 1.06 in. (2.69 cm), replace outer case assembly (WP 0043).	Wear limits are exceeded.
			2. Inspect front roller pin hole for wear. If hole diameter exceeds 0.75 in. (1.91 cm), replace outer case assembly (WP 0043).	Wear limits are exceeded.
			3. Remove and disassemble hydraulic brake actuator assembly (WP 0043).	Wear limits are exceeded.
3	Semiannual	Tires	1. Visually check for underinflated and unserviceable tires. Check tires for leaks, cuts, gouges, cracks, or bulges. Remove all penetrating objects.	Any tire is missing or unserviceable. Tires have leaks, cuts, gouges, cracks, or bulges that would result in tire failure during operation.

Table 1. Field Preventive Maintenance Checks and Services (PMCS) - Continued.

ITEM NO.	INTERVAL	ITEM TO BE CHECKED OR SERVICED	PROCEDURE	EQUIPMENT NOT READY/ AVAILABLE IF:
			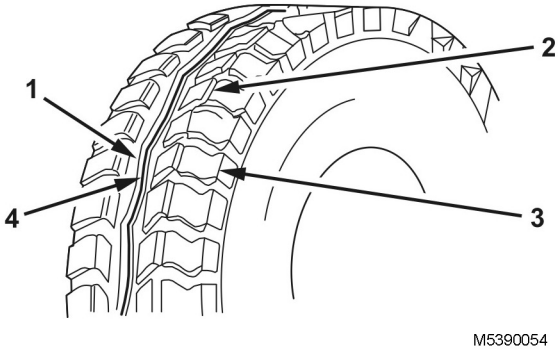 Figure 1. Tire.	
			2. Check tire tread depth. Tread should not be worn beyond level-of-wear bar (Figure 1, Item 4). Wear bars are molded across the tread pattern and are noticeable only in the valley between the center rib (Figure 1, Item 1) and the lugs (Figure 1, Item 2). The letters "TWI" (Tread Wear Indicator) are molded on the tire sidewall (Figure 1, Item 3) to aid in locating the wear bar. If excessive wear, replace.	Tread is worn beyond level-of-wear bar.
4	Semiannual	Wheel Assemblies	1. Check stud nuts to ensure that they are not loose or missing. If any are loose, tighten. If any are missing, replace. Torque nuts in accordance with (WP 0007) and (WP 0008).	Any stud nuts are missing.
			2. Inspect wheel bearings and races for damage. If any bearing needs replacing, replace all bearings on both sides (WP 0046). Repack wheel bearings in accordance with (WP 0064).	Any damage is found.
			3. Inspect wheel cylinders for leaks or damage.	Any leaks or damage are found.
			4. Inspect inside of drum for scoring. Replace brakedrum (WP 0046).	Any scoring is evident.
			5. Inspect brakeshoes for glazing or wear. If any shoe needs replacing, replace all shoes on both sides (WP 0038).	Brakeshoe is glazed or thickness is less than 0.125 in. (3.2 mm).
			6. Adjust service brakes (WP 0038).	
5	Semiannual	Shock Absorbers	Inspect shock absorbers for leaks, missing nuts, and dents. Repair or replace as needed (WP 0050).	Any leaks are evident, mounting hardware is missing, damage is evident.

Table 1. Field Preventive Maintenance Checks and Services (PMCS) - Continued.

ITEM NO.	INTERVAL	ITEM TO BE CHECKED OR SERVICED	PROCEDURE	EQUIPMENT NOT READY/ AVAILABLE IF:
6	Semiannual	Axle	1. Measure shock absorber extension rod (Figure 2, Item 1). If the exposed extension rod on either absorber measures less than 2.26 in. (5.72 cm) or if difference between two extension rods is 0.75 in. (1.92 cm) or greater, axle requires replacement.	Measurements not within specification.
			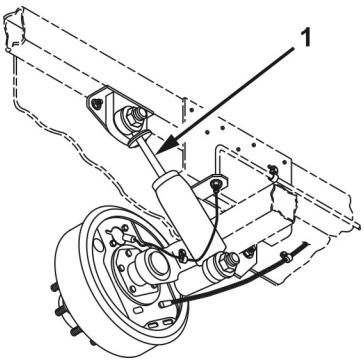 Figure 2. Axle Mounting.	
			2. Check axle mounting hardware for secure mounting. Tighten or replace hardware as required.	
7	Semiannual	Handbrake	Lubricate handbrakes in accordance with (WP 0064).	
8	Semiannual	Hydraulic Brake System	1. Inspect brake lines and hoses for defects such as missing clamps, cracks, leaks, loose connections, or broken lines. Repair as needed (WP 0045).	Any leaks are found.
			2. Inspect master cylinder assembly for damage or missing cap, leaks, and proper fluid level. If cap is damaged or missing, replace it. Proper fluid level is 0.12 in. (3 mm) below top edge of reservoir. If not at specified level, add fluid in accordance with (WP 0064).	Any leaks are found.
			3. Visually check brake breakaway cable and breakaway lever for damage and missing parts. Check that breakaway lever is in down position. If damaged or missing parts, repair as needed (WP 0042).	Cable or lever is missing or damaged.
9	Semiannual	Lights, Reflectors, and Wiring	1. Visually inspect lights and reflectors for missing or broken parts or loose connections. If any connectors are loose, tighten. If reflectors are missing or broken, replace.	Any lights or reflectors are missing or broken.
			2. Inspect wiring harness and intervehicular cable for exposed, frayed, or damaged wiring or missing mounting hardware. If damaged, replace (WP 0034).	Wiring harness or cable is exposed, frayed, or damaged. Mounting hardware is missing.

Table 1. Field Preventive Maintenance Checks and Services (PMCS) - Continued.

ITEM NO.	INTERVAL	ITEM TO BE CHECKED OR SERVICED	PROCEDURE	EQUIPMENT NOT READY/ AVAILABLE IF:
			3. Connect intervehicular cable to towing vehicle (WP 0005). Operate towing vehicle light switch through all settings and check trailer lights. If any are inoperative or unserviceable, repair as needed.	Other than marker lights, one or more lights are inoperative or unserviceable.
10	Semiannual	Front Support Leg	1. Check front support leg for damage, missing parts, and proper operation. Check that caster moves freely and handle can be cranked to raise and lower trailer. Repair or replace as needed (WP 0049). 2. Fully extend support leg and clean as necessary (WP 0049). 3. Lubricate support leg (WP 0064).	
11	Semiannual	Rear Stabilizers	Inspect rear stabilizers for damage. Ensure that hinge on flex plate can be rotated and sections slide up and down when pin is removed. Repair as needed.	Damage is evident or parts are missing.
12	Semiannual	Cargo Body	1. Inspect cargo body for missing rivets, missing cargo tiedowns, and damage to the box. 2. Inspect tailgate for damage, missing or broken hardware, missing or broken lanyard cable, and missing or damaged pin. Check that tailgate rotates freely on hinges. Repair or replace as needed (WP 0053). 3. Inspect decontamination bracket for damage or missing hardware. Repair or replace as needed (WP 0059). 4. Visually check that identification plate and shipping plate are firmly attached and readable. Replace as needed (WP 0060).	
13	Semiannual	Soft Top Kit	1. Visually inspect soft cover for rips, tears, fungus, or missing footman straps. Replace as needed (WP 0061). 2. Inspect bows for damage. Replace if damaged (WP 0061).	

END OF WORK PACKAGE

CHAPTER 6

FIELD MAINTENANCE INSTRUCTIONS

FIELD MAINTENANCE
SERVICE UPON RECEIPT

INITIAL SETUP:

References
- DA Form 2404
- DA Form 5988-E
- DA PAM 750-8
- DD Form 314
- DD Form 1397

References (cont.)
- SF 364
- WP 0009
- WP 0010
- WP 0064
- WP 0095

SERVICE UPON RECEIPT OF MATERIEL

When a new, used, or reconditioned trailer is first received, determine whether it has been properly prepared for service and is in condition to perform its mission. Follow the inspection instructions below and servicing instructions (page 0026-2).

UNPACKING

1. Refer to DD Form 1397 for procedures on unpacking the trailer.
2. Remove all straps, plywood, tape, seals, and wrappings.

END OF TASK

CHECKING UNPACKED EQUIPMENT

1. Inspect the equipment for damage incurred during shipment. If the equipment has been damaged, report the damage on SF 364, Report of Discrepancy.
2. Check the equipment against the packing slip to see if shipment is complete. Report all discrepancies in accordance with the instructions in DA PAM 750-8.

END OF TASK

PROCESSING UNPACKED EQUIPMENT

1. No tools are required to process the equipment. All supplies required to service the equipment are listed in Expendable and Durable Items List (WP 0095).

WARNING

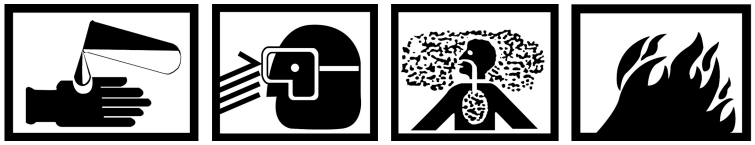

- **Solvent cleaning compound MIL-PRF-680 may be irritating to the eyes and skin. Wear protective gloves and goggles. First aid for skin contact: remove contaminated clothing. Wash skin thoroughly with soap and water. First aid for eye contact: flush with water for 15 minutes or until irritation subsides. If symptoms persist, seek medical attention. Failure to comply may result in personnel death or injury. Seek medical attention in event of injury.**
- **Use solvent cleaning compound MIL-PRF-680 in a well-ventilated area. Use respirator as needed. Accidental ingestion can cause irritation of digestive tract and respiratory tract. May cause lung and central nervous system damage. Can be fatal if swallowed. Inhalation of high/massive concentrations can cause coma or be fatal. First aid for ingestion: DO NOT induce vomiting. Seek immediate medical attention. First aid for inhalation: move to fresh air. If not breathing, provide artificial respiration. If symptoms persist, seek medical attention. Failure to comply may result in personnel death or injury. Seek medical attention in event of injury.**
- **MIL-PRF-680 solvent is combustible; DO NOT use or store near heat, sparks, flame, or other ignition sources. Use mechanical ventilation whenever product is used in a confined space, heated above ambient temperatures, or agitated. Keep container sealed when not in use. Failure to comply may result in personnel death or injury. Seek medical attention in event of injury.**
- **Improper cleaning methods and use of unauthorized cleaning liquids or solvents can injure personnel and damage equipment. Failure to comply may result in personnel death or injury. Seek medical attention in event of injury.**
- **Cloths or rags saturated with solvent cleaning compound must be disposed of in accordance with authorized facility procedures. Failure to comply may result in personnel death or injury. Seek medical attention in event of injury.**

2. Remove rust preventive compound from coated exterior parts of the trailer using cleaning solvent (WP 0095, Table 1, Item 6) and a clean rag (WP 0095, Table 1, Item 28).

END OF TASK

INSTALLATION INSTRUCTIONS

The trailer is shipped complete and ready for use after completion of preliminary servicing and adjustment. No piece of equipment is shipped separately; therefore, no assembly is required.

END OF TASK

PRELIMINARY SERVICING AND ADJUSTMENT

1. Perform all Operator and Field Preventative Maintenance Checks and Services (PMCS). Schedule the next PMCS on DD Form 314.
2. Lubricate all lubrication points in accordance with Lubrication Instructions (WP 0064).
3. If any system of the trailer does not operate properly, refer to troubleshooting instructions (Operator Troubleshooting Symptom Index (WP 0009) and Field Troubleshooting Symptom Index (WP 0010)).

PRELIMINARY SERVICING AND ADJUSTMENT - Continued

4. Perform a break-in road test of 25 mi (40 km) at a maximum speed of 50 mph (80 km/h).
5. Report all problems on DA Form 2404 or DA Form 5988-E.

END OF TASK

END OF WORK PACKAGE

FIELD MAINTENANCE
GENERAL MAINTENANCE INSTRUCTIONS

INITIAL SETUP:

References
TB 43-0209
TM 9-214

References (cont.)
TM 43-0139
WP 0095

WARNING

Accidental or intentional introduction of liquid contaminants into the environment is a violation of state, federal, and military regulations. Refer to Army Petroleum, Oils, and Lubricants (POL) for information concerning storage, use, and disposal of these liquids. Failure to comply may cause damage to environment and health of personnel. Seek medical attention in the event of an injury.

NOTE

- Refer to local procedures and plans for responding to fluid spills or leaks. Comply with local regulations when disposing of cleanup material and spilled fluids.
- Refer to local procedures and plans for storage and disposal of any drained fluids.
- DO NOT overfill any fluid reservoir/tank. If a fluid starts to flow out of reservoir/tank, stop immediately to avoid spillage. Immediately clean up spilled fluid before proceeding with any task.

GENERAL

1. These general maintenance instructions contain general shop practices and specific procedures you must be familiar with to properly maintain the trailer. You should read and understand these practices and procedures before performing any maintenance procedures.
2. Before beginning a task, find out how much repair, modification, or replacement is needed to fix the equipment. Sometimes the reason for equipment failure can be seen right away, and complete teardown is not necessary. Disassemble equipment only as far as necessary to repair or replace damaged parts.
3. In some cases, a part may be damaged by removal. If the part appears to be good and other parts behind it are not defective, leave it on and continue with the procedure. Here are a few simple rules:
    a. Do not remove dowel pins or studs unless loose, bent, broken, or otherwise damaged.
    b. Do not remove bearings or bushings unless damaged. If you need to remove them to access parts behind, carefully pull out bearings and bushings.
    c. Replace all gaskets, lockwashers, self-locking nuts, seals, cotter pins, and preformed packings.
4. The following "Initial Setup" information applies to all procedures:
    a. "Equipment Conditions" must be performed prior to performing the maintenance task.
    b. Resources are not listed unless they apply to the procedure.
5. All tags and forms attached to the equipment must be checked to learn the reason for removal of equipment from service. Modification Work Orders (MWOs) and Technical Bulletins (TBs) must be checked for equipment changes and updates.

WORK SAFETY

1. Observe all warnings and cautions.
2. Before beginning a procedure, think about the safety risks and hazards to yourself and others. Wear protective gear such as safety goggles or lenses, safety shoes, rubber apron, gloves, and breathing mask when instructed to do so.
3. Immediately clean up spilled fluids to avoid slipping.
4. When lifting heavy objects, have someone help you. Ensure that lifting equipment or jack is working properly, that it meets weight requirements of part being lifted, and that it is securely fastened to part.
5. Always use power tools carefully.

END OF TASK

CLEANING INSTRUCTIONS

WARNING

Improper cleaning methods and use of unauthorized cleaning agents can injure personnel and damage equipment. Failure to comply may result in personnel injury or equipment damage. Seek medical attention in event of injury.

General

Cleaning instructions will be the same for the majority of parts and components that make up the trailer. The following applies to all cleaning operations:

- Clean all parts before inspection, after repair, and before disassembly.
- Keep hands free of grease that can collect dust, dirt, or grit.
- After cleaning, all parts should be covered or wrapped to protect them from dust and dirt. Parts that are subject to rust should be lightly oiled.

Steam Cleaning

WARNING

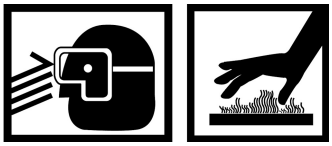

- **Avoid contact with live steam. Live steam can burn skin, cause blindness, and cause other serious injury. Be sure to wear protective apron, gloves, and goggles when using live steam. Failure to comply may result in personnel injury. Seek medical attention in event of injury.**
- **If trailer is to be steam cleaned, protect all electrical components that could be damaged by steam or moisture. Failure to comply may result in equipment damage. Seek medical attention in event of injury.**

CLEANING INSTRUCTIONS - Continued

Castings, Forgings, and Machined Metal Parts

WARNING

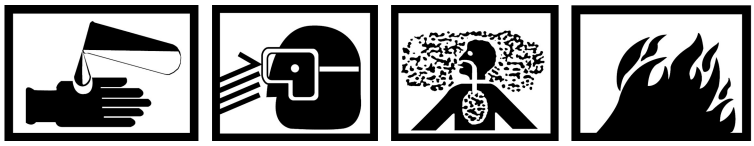

- **Solvent cleaning compound MIL-PRF-680 may be irritating to the eyes and skin. Wear protective gloves and goggles. First aid for skin contact: remove contaminated clothing. Wash skin thoroughly with soap and water. First aid for eye contact: flush with water for 15 minutes or until irritation subsides. If symptoms persist, seek medical attention. Failure to comply may result in personnel death or injury. Seek medical attention in event of injury.**
- **Use solvent cleaning compound MIL-PRF-680 in a well-ventilated area. Use respirator as needed. Accidental ingestion can cause irritation of digestive tract and respiratory tract. May cause lung and central nervous system damage. Can be fatal if swallowed. Inhalation of high/massive concentrations can cause coma or be fatal. First aid for ingestion: DO NOT induce vomiting. Seek immediate medical attention. First aid for inhalation: move to fresh air. If not breathing, provide artificial respiration. If symptoms persist, seek medical attention. Failure to comply may result in personnel death or injury. Seek medical attention in event of injury.**
- **MIL-PRF-680 solvent is combustible; DO NOT use or store near heat, sparks, flame, or other ignition sources. Use mechanical ventilation whenever product is used in a confined space, heated above ambient temperatures, or agitated. Keep container sealed when not in use. Failure to comply may result in personnel death or injury. Seek medical attention in event of injury.**
- **Improper cleaning methods and use of unauthorized cleaning liquids or solvents can injure personnel and damage equipment. Failure to comply may result in personnel death or injury. Seek medical attention in event of injury.**
- **Cloths or rags saturated with solvent cleaning compound must be disposed of in accordance with authorized facility procedures. Failure to comply may result in personnel death or injury. Seek medical attention in event of injury.**

1. Clean inner and outer surfaces with cleaning solvent (WP 0095, Table 1, Item 6).
2. Remove grease and accumulated deposits with a scrub brush (WP 0095, Table 1, Item 4).

CLEANING INSTRUCTIONS - Continued

WARNING

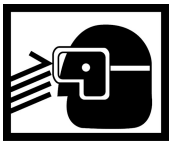

Compressed air used for cleaning or drying purposes should never exceed 30 psi (207 kPa). Wear protective clothing (goggles/shield, gloves, etc.), and use caution to avoid injury to personnel. Failure to comply may result in personnel injury. Seek medical attention in event of injury.

CAUTION

DO NOT wash seals, electrical cables/wiring, or flexible hoses with cleaning solvent. Serious damage or destruction of material will result. Failure to comply may result in equipment damage.

3. Clean all threaded holes with compressed air to remove dirt and cleaning fluids.

Electrical Cables and Flexible Hoses

Wash electrical cables and flexible hoses with a solution of detergent (WP 0095, Table 1, Item 9) and water, and wipe dry.

Bearings

Clean bearings in accordance with TM 9-214.

END OF TASK

PRESERVATION OF PARTS

Unpainted metal parts that will not be installed immediately after cleaning may be covered with a thin coat of lubricating oil (WP 0095, Table 1, Item 19).

END OF TASK

PAINTING

WARNING

The following referenced publications contain safety and environmental precautions and instructions that must be understood and applied during the painting of the trailer to ensure personnel against injury, long-term health hazards, or death. Failure to comply may result in personnel death or injury. Seek medical attention in event of injury.

On painted areas where paint has been removed, paint in accordance with procedures outlined in TM 43-0139 and TB 43-0209.

END OF TASK

INSPECTION INSTRUCTIONS

NOTE

All damaged areas should be marked for repair or replacement.

1. Carefully check all components and parts to determine if they are serviceable for use, can be repaired, or must be replaced.
2. Inspect drilled and tapped (threaded) holes for the following:
   - Wear, distortion, cracks, and other damage in or around holes
   - Threaded areas for wear distortion (stretching) and evidence of cross-threading
3. Inspect metal and flexible lines, hoses, and metal fittings and connectors for the following:
   - Metal lines for sharp kinks, cracks, bad bends, and dents
   - Flexible lines for fraying, evidence of leakage, and loose metal fittings or connectors
   - Metal fittings and connectors for thread damage and worn or round hex heads
4. Inspect castings, forgings, and machined metal parts for the following:
   - Machined surfaces for nicks, burrs, raised metal wear, and other damage
   - Inner and outer surfaces for breaks or cracks
5. Inspect bearings in accordance with TM 9-214.

END OF TASK

TAGGING PARTS

1. Use marker tags (WP 0095, Table 1, Item 30) to identify all electrical parts and hydraulic lines and any other parts that may be hard to identify or replace later. Fasten tags to parts during removal by wrapping wire fasteners around or through parts and twisting ends together. Position tags to be out of the way during cleaning, inspection, and repair. Mark tags with a pen, pencil, or marker.
2. Whenever possible, identify electrical wires with number of terminal or wire to which it connects. If no markings can be found, tag both wires or wire and terminal, and use same identifying marks for both.
3. Identify and tag other parts as required by name and installed location.

END OF TASK

ELECTRICAL GROUND POINTS

Many electrical problems are the result of poor ground connections. You can ensure that ground connections are good by performing the following steps:

1. Remove any rust at ground points with wire brush (WP 0095, Table 1, Item 5).
2. Check ground point mounting hardware for any loose or damaged parts, and tighten or replace as necessary.
3. Clean ground point mounting hardware with cleaning solvent (WP 0095, Table 1, Item 6).

END OF TASK

HYDRAULIC BRAKE LINES AND PORTS

To keep dirt from contaminating the hydraulic brake system when removing and installing brake lines, perform the following:

1. Clean fittings and surrounding areas before disconnecting lines.
2. Cover lines and ports after disconnecting lines. Use wooden plugs, clean rags WP 0095, Table 1, Item 28), duct tape, or other similar materials to prevent dirt from entering system.
3. Ensure that used and new parts are clean before connecting.
4. Wait to uncover lines and ports until just before connecting lines.

END OF TASK

END OF WORK PACKAGE

FIELD MAINTENANCE
WIRING HARNESS CLIP REPLACEMENT

INITIAL SETUP:

Tools and Special Tools
- Tool Kit, General Mechanic's (WP 0096, Table 1, Item 1)
- Tool Kit, Blind Riveter (WP 0096, Table 1, Item 12)

Materials/Parts
- Tag, Marker (WP 0095, Table 1, Item 30)
- Rivet Qty: 3 (WP 0069, Figure 1, Item 2)
- Screw, Self-Tapping (WP 0069, Figure 1, Item 3)

Equipment Condition
- Parked on level surface
- Wheels chocked (WP 0005)
- Handbrake applied
- Intervehicular cable disconnected from towing vehicle (WP 0005)

REMOVAL

NOTE

Tag wires for installation if marker bands are missing or illegible.

1. Remove six wire shields on trailer branched wiring harness (Figure 1, Item 1) from wiring harness clip (Figure 1, Item 3).
2. Tag and disconnect intervehicular cable (Figure 1, Item 5) from trailer branched wiring harness (Figure 1, Item 1).
3. Remove screw (Figure 1, Item 6) securing ground wire (Figure 1, Item 7) to trailer frame (Figure 1, Item 2). Discard screw.
4. Remove three rivets (Figure 1, Item 4) securing wiring harness clip (Figure 1, Item 3) to trailer frame (Figure 1, Item 2). Discard rivets.

END OF TASK

INSTALLATION

1. Install three new rivets (Figure 1, Item 4) securing wiring harness clip (Figure 1, Item 3) to trailer frame (Figure 1, Item 2).
2. Install new screw (Figure 1, Item 6) securing ground wire (Figure 1, Item 7) to trailer frame (Figure 1, Item 2).
3. Connect intervehicular cable (Figure 1, Item 5) to trailer branched wiring harness (Figure 1, Item 1).
4. Install six wire shields on trailer branched wiring harness (Figure 1, Item 1) into wiring harness clip (Figure 1, Item 3).

INSTALLATION - Continued

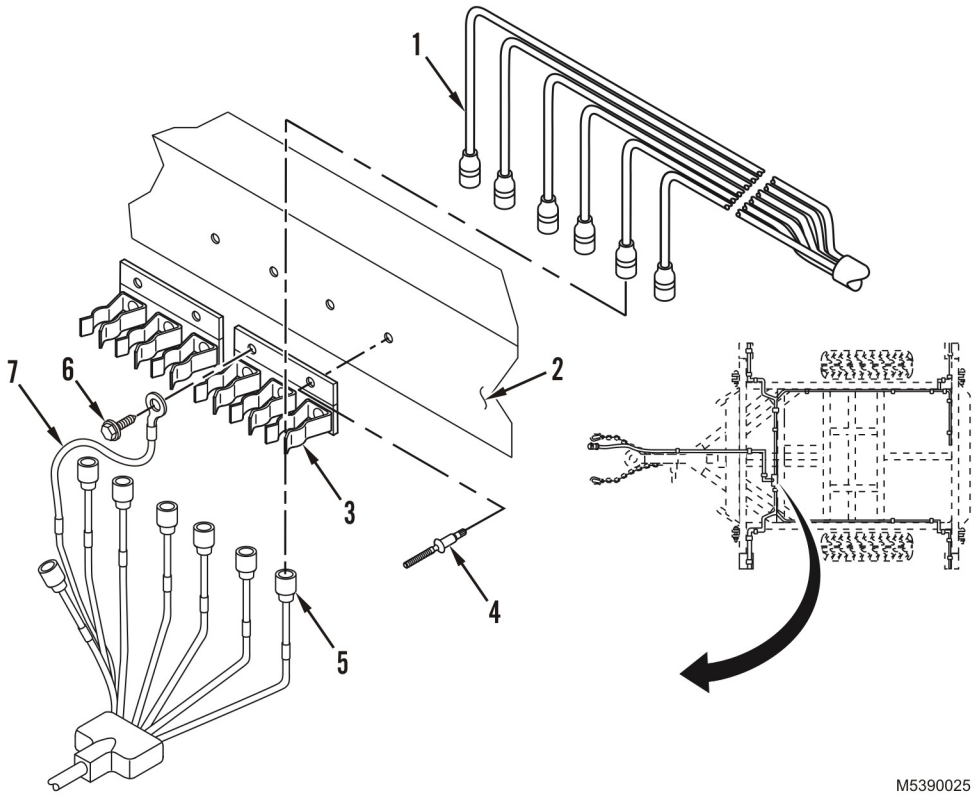

Figure 1. Wiring Harness Clip Removal and Installation.

END OF TASK

FOLLOW-ON MAINTENANCE

1. Connect intervehicular cable to towing vehicle (WP 0005).
2. Check operation of lights.

END OF TASK

END OF WORK PACKAGE

FIELD MAINTENANCE
TAILLIGHT MAINTENANCE

INITIAL SETUP:

Tools and Special Tools
Tool Kit, General Mechanic's (WP 0096, Table 1, Item 1)

Materials/Parts
Strap, Tiedown, Electrical (WP 0095, Table 1, Item 29)

Materials/Parts (cont.)
Tag, Marker (WP 0095, Table 1, Item 30)
Packing (WP 0070, Figure 2, Item 7)

Equipment Condition
Intervehicular cable disconnected from towing vehicle (WP 0005)

NOTE

There are two configurations of taillights, one with incandescent bulbs and one with an LED. This WP covers both configurations.

LAMP BULB/LED REPLACEMENT

1. Loosen, but do not remove, six retaining screws (Figure 1, Item 2) securing light lens (Figure 1, Item 3) to taillight (Figure 1, Item 1).
2. Remove lens (Figure 1, Item 3) and packing (Figure 1, Item 4) from groove in taillight (Figure 1, Item 1). Discard packing.
3. Remove defective lamp (Figure 1, Item 5 or Item 6) by pushing in and turning counterclockwise.
4. Install new lamp (Figure 1, Item 5 or Item 6) by pushing in and turning clockwise.
5. Remove defective Light-Emitting Diode (LED) (Figure 1, Item 7 or Item 8) by pulling forward on printed circuit board; then at socket, push in and turn counterclockwise.
6. Install new LED (Figure 1, Item 7 or Item 8) by pushing in and turning clockwise; then pushing printed circuit board onto socket.
7. Install new packing (Figure 1, Item 4) into lens groove (Figure 1, Item 3).
8. Install light lens (Figure 1, Item 3) onto taillight (Figure 1, Item 1) and tighten six screws (Figure 1, Item 2) evenly.

LAMP BULB/LED REPLACEMENT - Continued

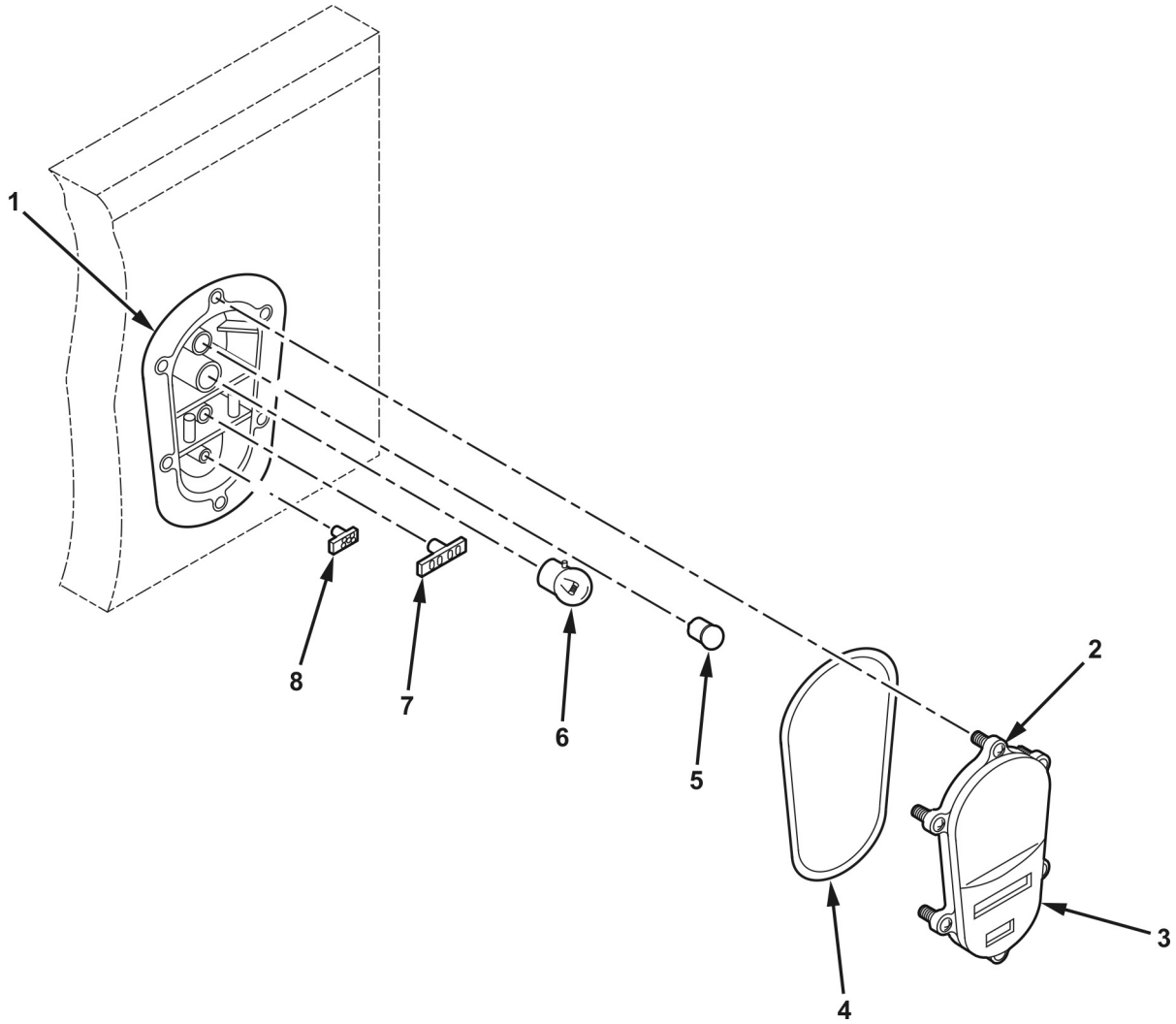

Figure 1. Lamp Bulb/LED Replacement.

END OF TASK

TAILLIGHT WITH BULB REMOVAL

NOTE

Tag wires for installation if marker bands are missing or illegible.

1. Cut and remove electrical tiedown strap from wiring harness shield and remove split wiring harness shield. Do not discard shield.
2. Disconnect four leads (Figure 2, Item 5) from body wiring harness (Figure 2, Item 6).
3. Remove two capscrews (Figure 2, Item 1) securing plate (Figure 2, Item 2), ground strap (Figure 2, Item 7), and taillight (Figure 2, Item 4) to housing (Figure 2, Item 3).
4. Remove taillight (Figure 2, Item 4) by feeding wires, one at a time, through housing.

END OF TASK

TAILLIGHT WITH BULB INSTALLATION

1. Install taillight (Figure 2, Item 4) in housing (Figure 2, Item 3) by feeding wires, one at a time, through housing.

CAUTION

Housing is plastic material. Do not overtighten capscrews. Failure to comply may result in equipment damage.

2. Install one capscrew (Figure 2, Item 1) through ground strap (Figure 2, Item 7), plate (Figure 2, Item 2), and housing (Figure 2, Item 3) into taillight (Figure 2, Item 4). Install other capscrew through plate and housing into taillight.
3. Tighten two capscrews (Figure 2, Item 1).
4. Connect leads (Figure 2, Item 5) to body wiring harness (Figure 2, Item 6).
5. Install wiring harness shield to wiring harness (Figure 2, Item 6) and install electrical tiedown straps.

TAILLIGHT WITH BULB INSTALLATION - Continued

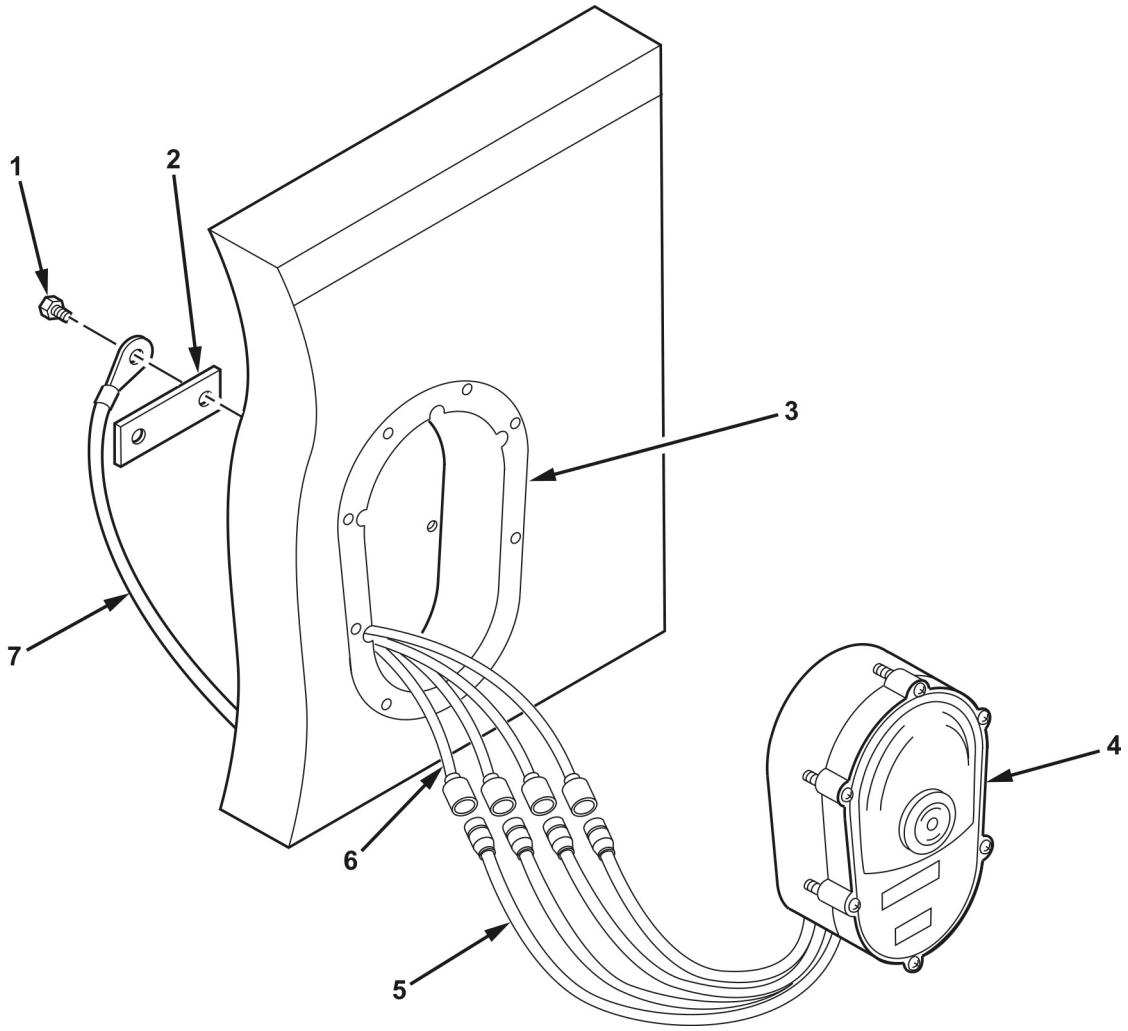

Figure 2. Taillight with Bulb Removal and Installation.

END OF TASK

TAILLIGHT WITH LED REMOVAL

NOTE

Tag wires for installation if marker bands are missing or illegible.

1. Cut and remove tiedown strap from wiring harness. Discard tiedown strap.
2. Disconnect four connectors (Figure 3, Item 7) from wiring harness connectors (Figure 3, Item 6).
3. Remove two bolts (Figure 3, Item 5), washers (Figure 3, Item 4), ground wire (Figure 3, Item 3), and plate (Figure 3, Item 2) from housing (Figure 3, Item 1).
4. Remove housing (Figure 3, Item 1) from cargo body.

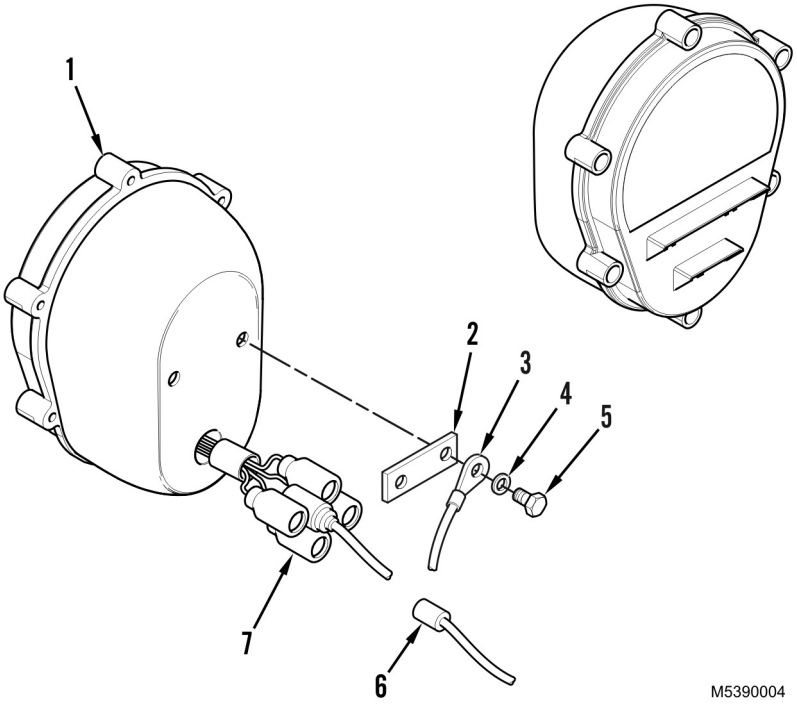

Figure 3. Taillight with LED Removal and Installation.

END OF TASK

TAILLIGHT WITH LED INSTALLATION

1. Position housing (Figure 3, Item 1) on cargo body.
2. Install plate (Figure 3, Item 2), ground wire (Figure 3, Item 3), two washers (Figure 3, Item 4), and bolts (Figure 3, Item 5) on housing (Figure 3, Item 1).
3. Connect four connectors (Figure 3, Item 7) to wiring harness connectors (Figure 3, Item 6).
4. Install new tiedown strap to secure wiring harness.

END OF TASK

FOLLOW-ON MAINTENANCE

1. Connect intervehicular cable to towing vehicle (WP 0005).
2. Check operation of light.

END OF TASK

END OF WORK PACKAGE

FIELD MAINTENANCE
FRONT AND SIDE MARKER LIGHTS MAINTENANCE

INITIAL SETUP:

Tools and Special Tools
Tool Kit, General Mechanic's (WP 0096, Table 1, Item 1)
Tool Kit, Blind Riveter (WP 0096, Table 1, Item 12)

Materials/Parts
Tag, Marker (WP 0095, Table 1, Item 30)

Materials/Parts (cont.)
Lockwasher (WP 0071, Figure 3, Item 14)
Rivet Qty: 11 (WP 0071, Figure 3, Item 2)

Equipment Condition
Intervehicular cable disconnected from towing vehicle (WP 0005)

NOTE

There are two configurations of marker lights, one with an incandescent bulb and one with an LED. The incandescent bulb marker light can be identified by a rectangular lens; the LED marker light can be identified by a round lens. This WP covers both configurations.

LAMP BULB REPLACEMENT

1. Remove two screws (Figure 1, Item 5) securing retainer (Figure 1, Item 4) and lens (Figure 1, Item 3) to light assembly (Figure 1, Item 1). Remove retainer and lens.
2. Remove lamp (Figure 1, Item 2) by pushing in and turning counterclockwise.
3. Install new lamp (Figure 1, Item 2) by pushing in and turning clockwise.
4. Install lens (Figure 1, Item 3) and retainer (Figure 1, Item 4) to light assembly (Figure 1, Item 1), and secure with two screws (Figure 1, Item 5).

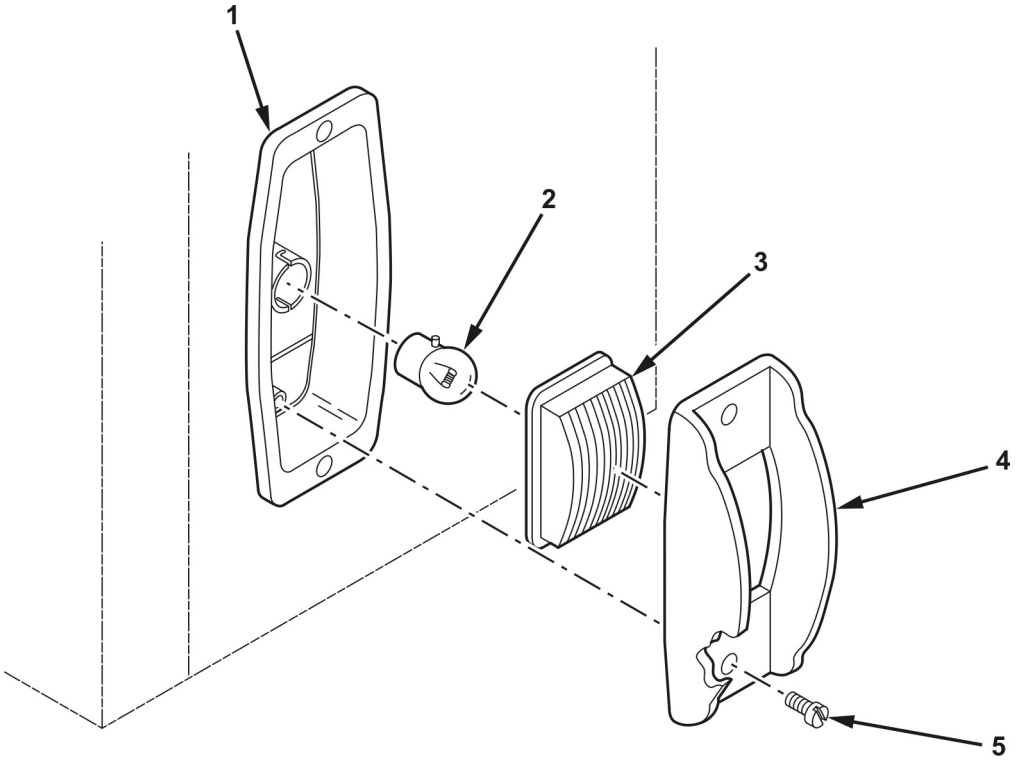

Figure 1. Lamp Bulb Replacement.

END OF TASK

LAMP ASSEMBLY WITH BULB REMOVAL

NOTE

Tag wires for installation if marker bands are missing or illegible.

1. Remove two screws (Figure 2, Item 9) securing retainer (Figure 2, Item 8) and lens (Figure 2, Item 7) to light assembly (Figure 2, Item 3).
2. Remove retainer (Figure 2, Item 8) and lens (Figure 2, Item 7) from light assembly (Figure 2, Item 3).

LAMP ASSEMBLY WITH BULB REMOVAL - Continued

3. Remove two rivets (Figure 2, Item 2) securing housing (Figure 2, Item 1) to cargo body. Discard rivets.
4. Remove housing (Figure 2, Item 1) and light assembly (Figure 2, Item 3) with attached lead (Figure 2, Item 12) and ground wire (Figure 2, Item 5) from cargo body.
5. Disconnect lead (Figure 2, Item 12) from wiring harness (Figure 2, Item 11).
6. Remove washer (Figure 2, Item 4) and capscrew (Figure 2, Item 6) securing ground wire (Figure 2, Item 5) to light assembly (Figure 2, Item 3).
7. Remove four rivets (Figure 2, Item 10) securing light assembly (Figure 2, Item 3) to housing (Figure 2, Item 1). Discard rivets.
8. Remove light assembly (Figure 2, Item 3) from housing (Figure 2, Item 1).

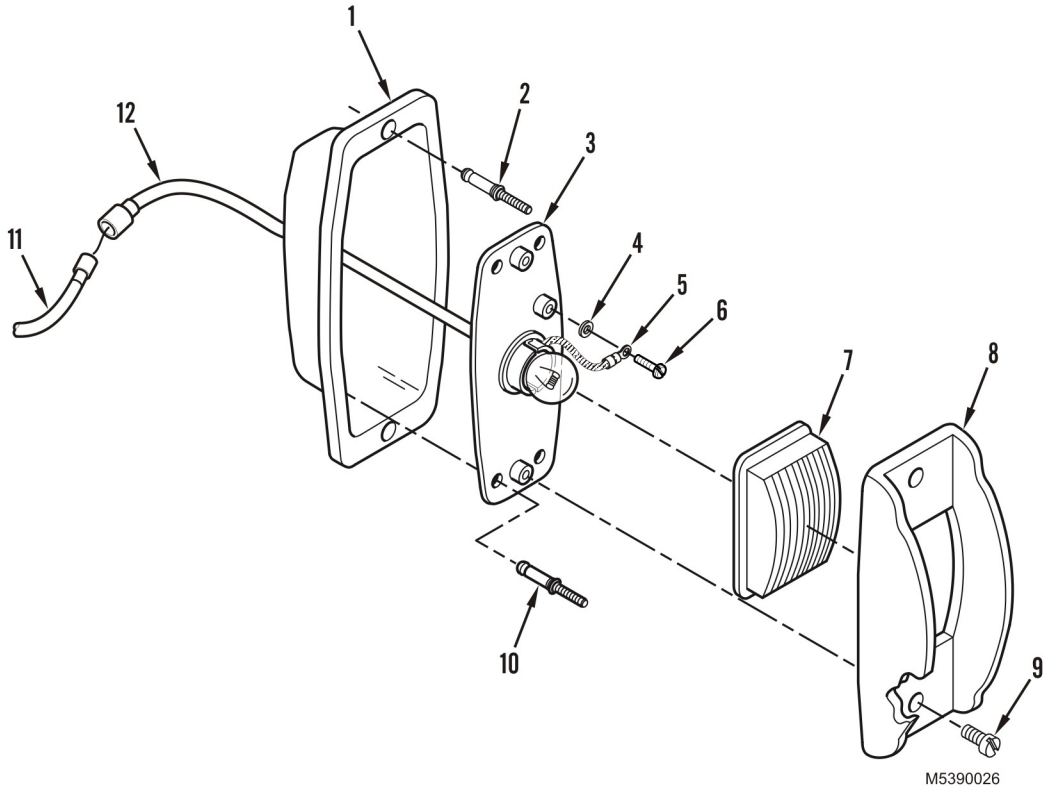

Figure 2. Lamp Assembly with Bulb Removal.

END OF TASK

LAMP ASSEMBLY WITH BULB INSTALLATION

1. Install light assembly (Figure 3, Item 3) into housing (Figure 3, Item 1).
2. Install four new rivets (Figure 3, Item 10) securing light assembly (Figure 3, Item 3) to housing (Figure 3, Item 1).
3. Install capscrew (Figure 3, Item 6) and washer (Figure 3, Item 4) securing ground wire (Figure 3, Item 5) to light housing (Figure 3, Item 3).
4. Connect lead (Figure 3, Item 12) to wiring harness (Figure 3, Item 11).
5. Install housing (Figure 3, Item 1) into cargo body and install two new rivets (Figure 3, Item 2) securing housing to cargo body.
6. Position lens (Figure 3, Item 7) and retainer (Figure 3, Item 8) on light assembly (Figure 3, Item 3).
7. Install two screws (Figure 3, Item 9) securing lens (Figure 3, Item 7) and retainer (Figure 3, Item 8) to light assembly (Figure 3, Item 3).

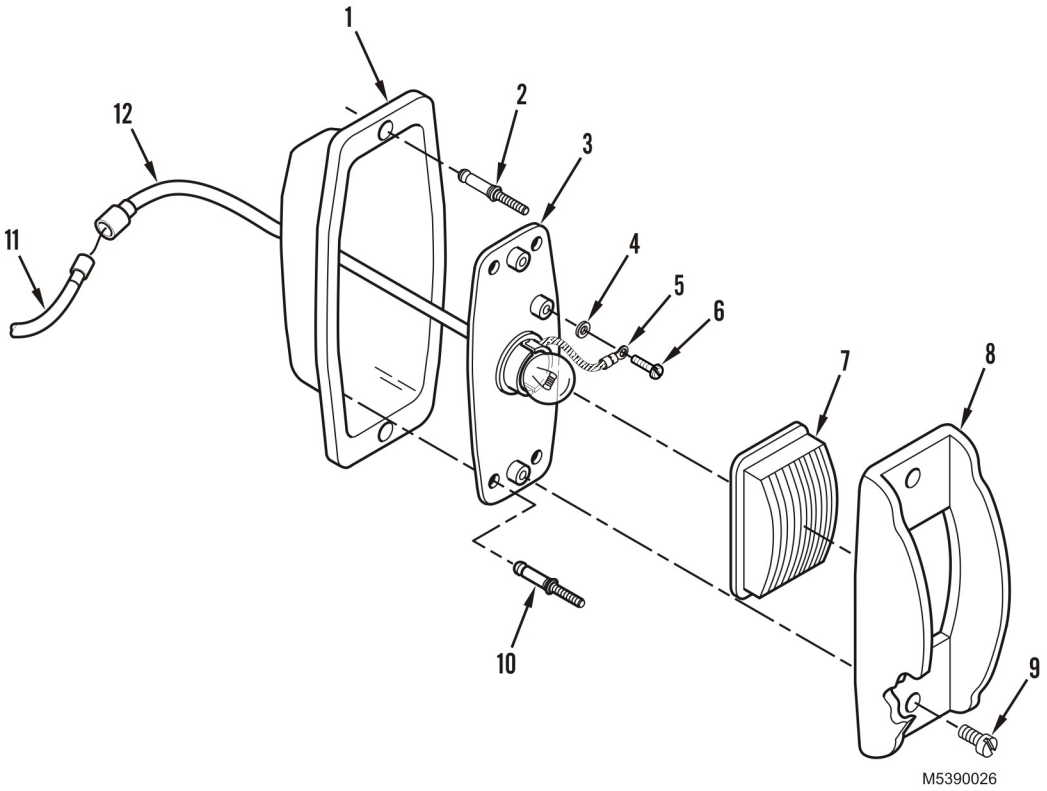

Figure 3. Lamp Assembly with Bulb Installation.

END OF TASK

LAMP ASSEMBLY WITH LED REMOVAL

1. Remove two screws (Figure 4, Item 7) and retainer with lens (Figure 4, Item 6) from plate (Figure 4, Item 3).
2. Disconnect connector (Figure 4, Item 8) from wiring harness (Figure 4, Item 11).

LAMP ASSEMBLY WITH LED REMOVAL - Continued

3. Remove three rivets (Figure 4, Item 9), nut (Figure 4, Item 12), lockwasher (Figure 4, Item 10), screw (Figure 4, Item 5), ground wire (Figure 4, Item 4), and plate (Figure 4, Item 3) from housing (Figure 4, Item 1). Discard rivets and lockwasher.
4. Remove two rivets (Figure 4, Item 2) and housing (Figure 4, Item 1) from cargo body. Discard rivets.

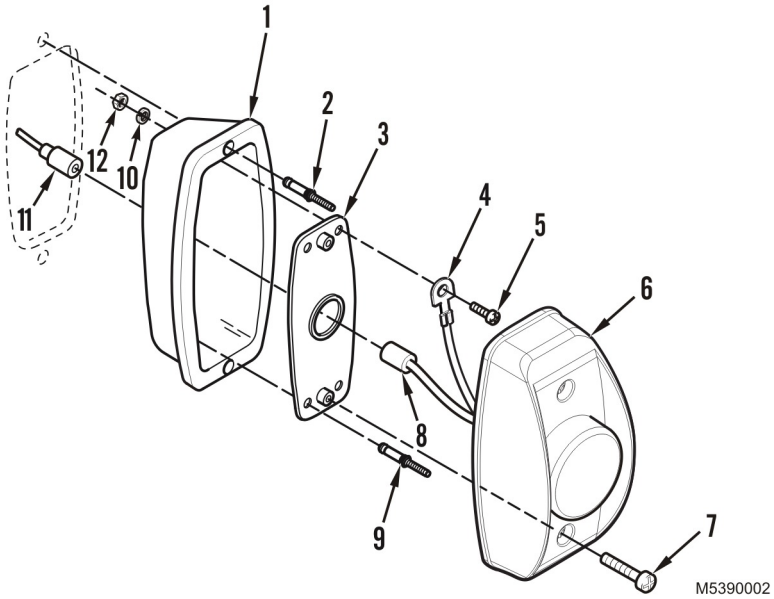

Figure 4. Lamp Assembly with LED Removal and Installation.

END OF TASK

LAMP ASSEMBLY WITH LED INSTALLATION

1. Install housing (Figure 4, Item 1) and two new rivets (Figure 4, Item 2) on cargo body.
2. Install plate (Figure 4, Item 3), ground wire (Figure 4, Item 4), screw (Figure 4, Item 5), new lockwasher (Figure 4, Item 10), nut (Figure 4, Item 12), and three new rivets (Figure 4, Item 9) on housing (Figure 4, Item 1).
3. Connect connector (Figure 4, Item 8) to wiring harness (Figure 4, Item 11).
4. Install retainer with lens (Figure 4, Item 6) and two screws (Figure 4, Item 7) on plate (Figure 4, Item 3).

END OF TASK

FOLLOW-ON MAINTENANCE

1. Connect intervehicular cable to towing vehicle (WP 0005).
2. Check operation of light.

END OF TASK

END OF WORK PACKAGE

FIELD MAINTENANCE
REAR MARKER LIGHTS MAINTENANCE

INITIAL SETUP:

Tools and Special Tools
Tool Kit, General Mechanic's (WP 0096, Table 1, Item 1)
Tool Kit, Blind Riveter (WP 0096, Table 1, Item 12)

Materials/Parts
Strap, Tiedown, Electrical (WP 0095, Table 1, Item 29)

Materials/Parts (cont.)
Tag, Marker (WP 0095, Table 1, Item 30)
Lockwasher (WP 0071, Figure 3, Item 14)
Rivet Qty: 3 (WP 0071, Figure 3, Item 2)

Equipment Condition
Intervehicular cable disconnected from towing vehicle (WP 0005)

NOTE

There are two configurations of marker lights, one with an incandescent bulb and one with an LED. The incandescent bulb marker light can be identified by a rectangular lens; the LED marker light can be identified by a round lens. This WP covers both configurations.

LAMP BULB REPLACEMENT

1. Remove two screws (Figure 1, Item 3) securing retainer (Figure 1, Item 8) and lens (Figure 1, Item 9) to light body (Figure 1, Item 11). Remove retainer and lens.
2. Remove lamp (Figure 1, Item 10) from socket (Figure 1, Item 11) by pushing in and turning counterclockwise.
3. Install lamp (Figure 1, Item 10) in socket (Figure 1, Item 11) by pushing in and turning clockwise.
4. Install lens (Figure 1, Item 9) and retainer (Figure 1, Item 8) to light body (Figure 1, Item 11), and secure with two screws (Figure 1, Item 3).

END OF TASK

LAMP ASSEMBLY WITH BULB REMOVAL

NOTE

Tag wires for installation if marker bands are missing or illegible.

1. Remove two screws (Figure 1, Item 3) securing lens (Figure 1, Item 9) and retainer (Figure 1, Item 8) to light body (Figure 1, Item 11). Remove lens and retainer.
2. Remove nut (Figure 1, Item 14), lockwasher (Figure 1, Item 13), and screw (Figure 1, Item 12). Discard lockwasher.
3. Remove three rivets (Figure 1, Item 2) securing light body (Figure 1, Item 11) to cargo body bracket (Figure 1, Item 1). Discard rivets.
4. Cut electrical tiedown straps (Figure 1, Item 7), and disconnect rear marker light connector (Figure 1, Item 4) from main wiring harness (Figure 1, Item 6).
5. Remove rear marker light body (Figure 1, Item 11) from cargo body bracket (Figure 1, Item 1).

END OF TASK

LAMP ASSEMBLY WITH BULB INSTALLATION

NOTE

Ensure ground wire is installed to one of the attaching hardware.

1. Install three new rivets (Figure 1, Item 2) securing marker light body (Figure 1, Item 11) to cargo body bracket (Figure 1, Item 1).
2. Install screw (Figure 1, Item 12), new lockwasher (Figure 1, Item 13), and nut (Figure 1, Item 14).
3. Connect rear marker light connector (Figure 1, Item 4) to main wiring harness (Figure 1, Item 6), and install electrical tiedown straps (Figure 1, Item 7).
4. Install two screws (Figure 1, Item 3) securing lens (Figure 1, Item 9) and retainer (Figure 1, Item 8) to marker light body (Figure 1, Item 11).

LAMP ASSEMBLY WITH BULB INSTALLATION - Continued

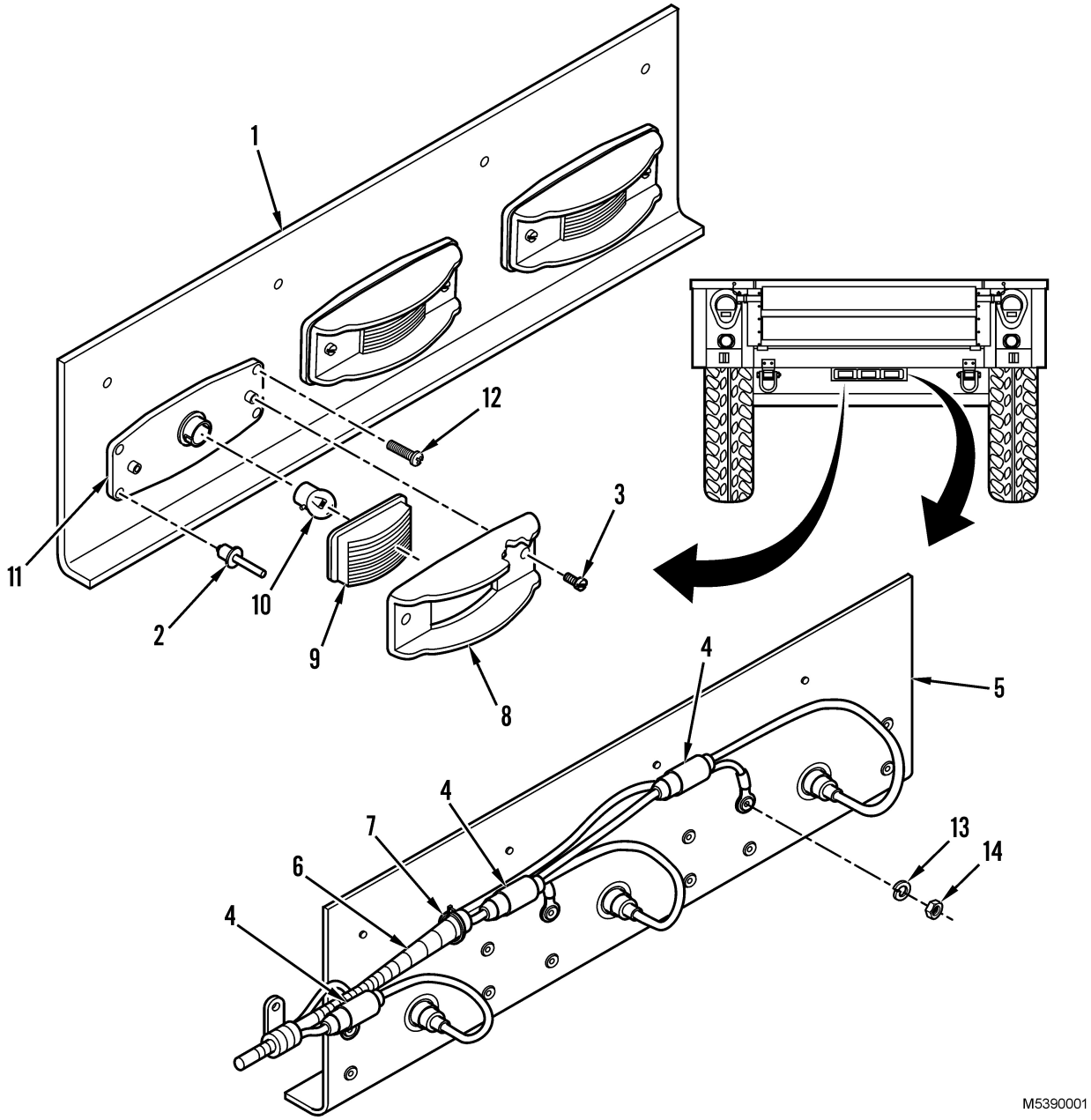

Figure 1. Marker Light Assembly View From Back Side and Rear of Vehicle.

END OF TASK

LAMP ASSEMBLY WITH LED REMOVAL

1. Remove two screws (Figure 2, Item 5) and retainer with lens (Figure 2, Item 4) from plate (Figure 2, Item 13).
2. Remove nut (Figure 2, Item 9), lockwasher (Figure 2, Item 8), screw (Figure 2, Item 3), and ground wire (Figure 2, Item 2). Discard lockwasher.
3. Remove three rivets (Figure 2, Item 11) securing plate (Figure 2, Item 13) to cargo body bracket (Figure 2, Item 1). Discard rivets.
4. Cut tiedown straps (Figure 2, Item 10) and disconnect light connector (Figure 2, Item 12) from wiring harness connector (Figure 2, Item 6).
5. Remove plate (Figure 2, Item 13) from cargo body bracket (Figure 2, Item 1).

END OF TASK

LAMP ASSEMBLY WITH LED INSTALLATION

1. Position plate (Figure 2, Item 13) on cargo body bracket (Figure 2, Item 1).
2. Connect light connector (Figure 2, Item 12) to wiring harness connector (Figure 2, Item 6) and install new tiedown straps (Figure 2, Item 10).
3. Install plate (Figure 2, Item 13) and three new rivets (Figure 2, Item 11) to cargo body bracket (Figure 2, Item 1).
4. Install ground wire (Figure 2, Item 2), screw (Figure 2, Item 3), new lockwasher (Figure 2, Item 8), and nut (Figure 2, Item 9).
5. Install retainer with lens (Figure 2, Item 4) and two screws (Figure 2, Item 5) on plate (Figure 2, Item 13).

LAMP ASSEMBLY WITH LED INSTALLATION - Continued

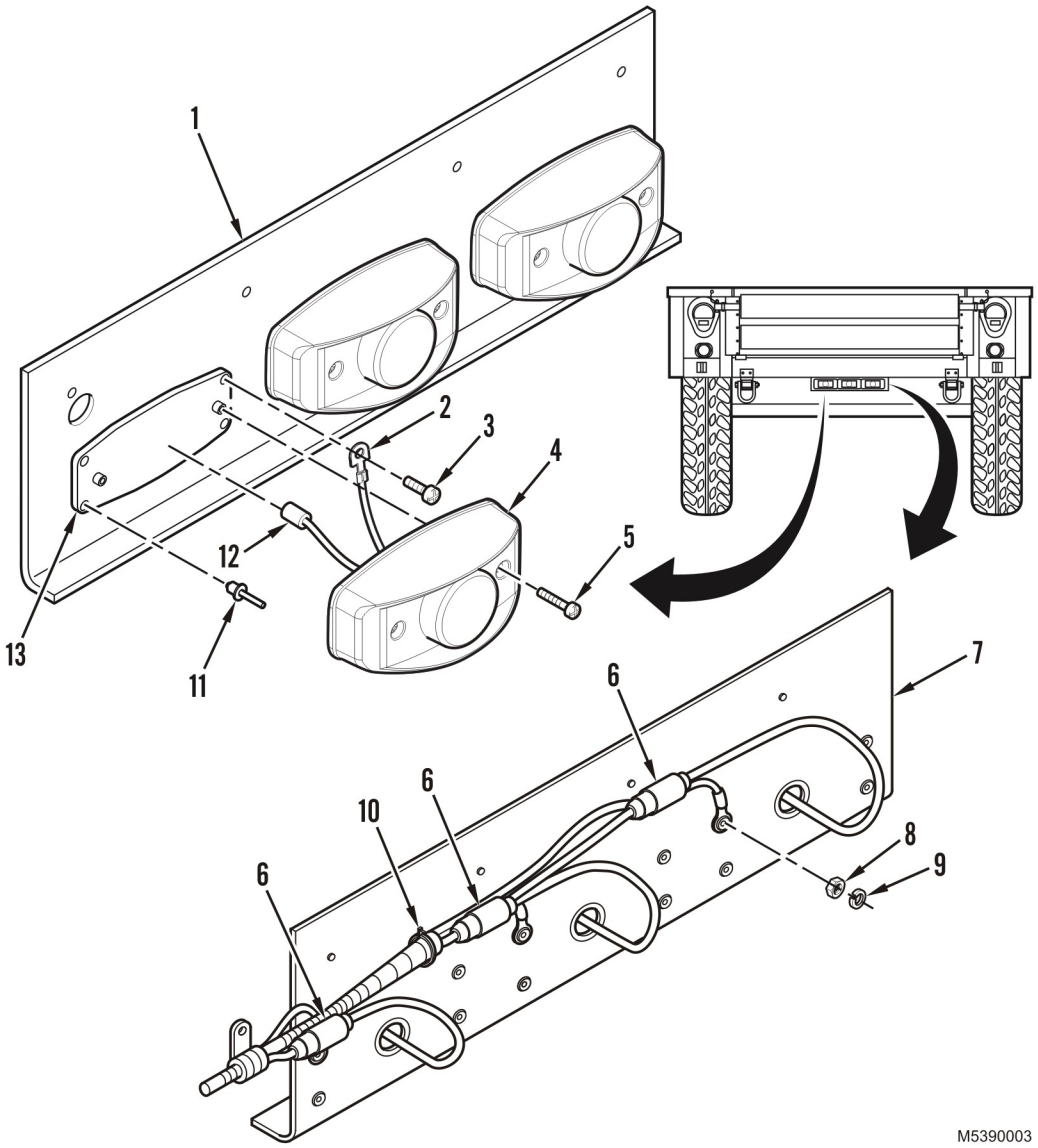

Figure 2. Lamp Assembly with LED Removal and Installation.

END OF TASK

FOLLOW-ON MAINTENANCE

1. Connect intervehicular cable to towing vehicle (WP 0005).
2. Check operation of light.

END OF TASK

END OF WORK PACKAGE

FIELD MAINTENANCE
BRANCHED WIRING HARNESS REPLACEMENT

INITIAL SETUP:

Tools and Special Tools
- Tool Kit, General Mechanic's (WP 0096, Table 1, Item 1)
- Tool Kit, Blind Riveter (WP 0096, Table 1, Item 12)

Materials/Parts
- Tag, Marker (WP 0095, Table 1, Item 30)
- Rivet Qty: 8 (WP 0072, Figure 4, Item 2)
- Rivet Qty: 41 (WP 0072, Figure 4, Item 4)
- Rivet Qty: 7 (WP 0072, Figure 4, Item 7)

References
- WP 0030
- WP 0067

Equipment Condition
- Parked on level surface
- Wheels chocked (WP 0005)
- Handbrake applied
- Intervehicular cable disconnected from towing vehicle (WP 0005)
- Front and side marker light assemblies removed (WP 0030)

REMOVAL

NOTE

Ensure intervehicular cable is disconnected.

1. Remove rivets (Figure 1, Item 3) and clamps (Figure 1, Item 2) securing branched wiring harness (Figure 1, Item 1) to trailer frame. Discard rivets.
2. Tag and disconnect branched wiring harness (Figure 1, Item 1) from intervehicular cable junction (Figure 1, Item 4), and remove branched wiring harness from trailer frame.

END OF TASK

INSTALLATION

CAUTION

Ensure proper alignment of wiring harness to avoid damage to wiring harness as it passes through the trailer frame. Failure to comply may result in equipment damage.

1. Connect wiring harness (Figure 1, Item 1) to intervehicular cable junction (Figure 1, Item 4), and install wiring harness on trailer frame.
2. Install new rivets (Figure 1, Item 3) and clamps (Figure 1, Item 2) securing wiring harness (Figure 1, Item 1) to trailer frame.

INSTALLATION - Continued

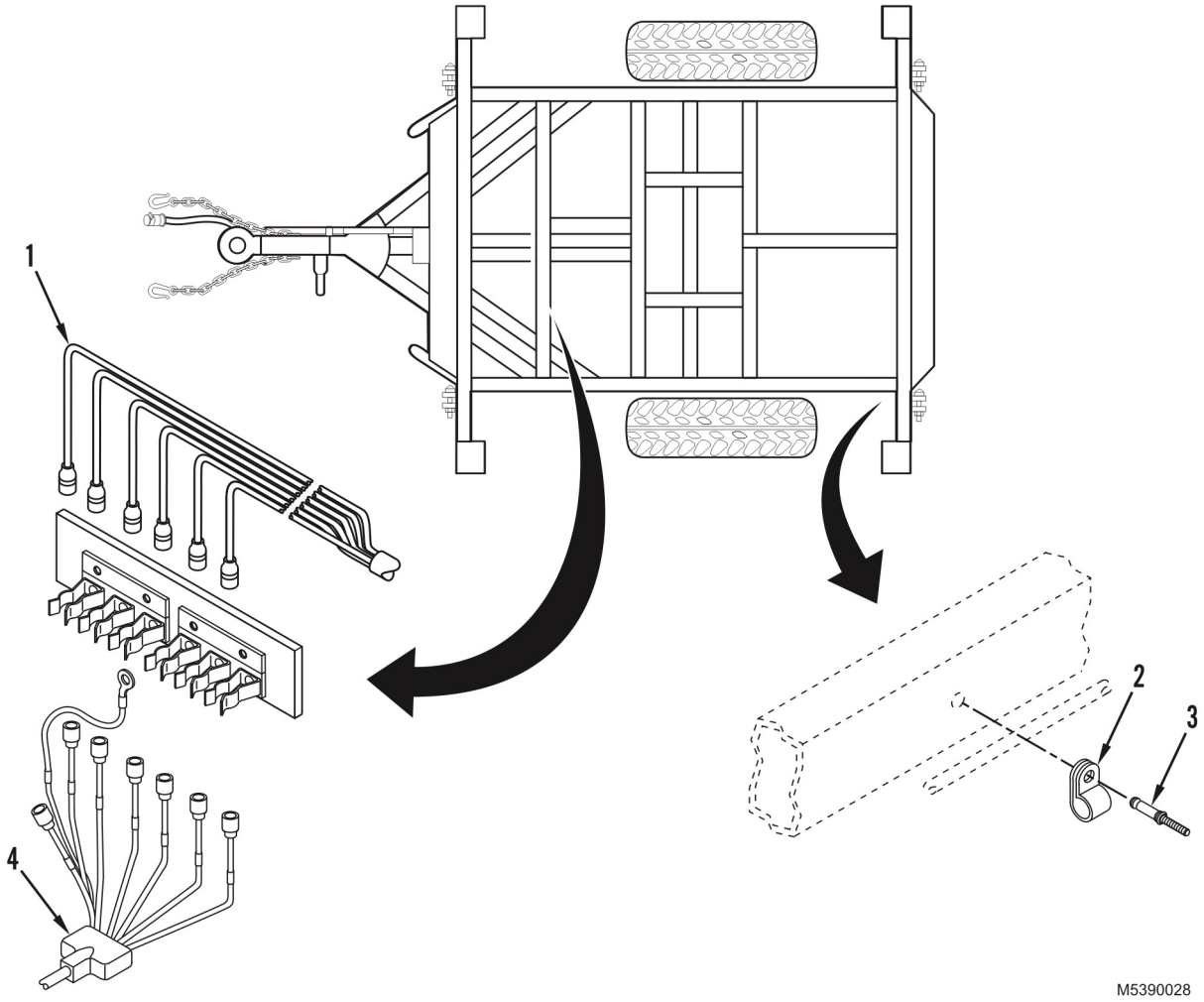

Figure 1. Branched Wiring Harness Removal and Installation.

END OF TASK

FOLLOW-ON MAINTENANCE

1. Install front/side marker lights (WP 0030).
2. Connect intervehicular cable.
3. Check lights for proper operation.
4. Disconnect intervehicular cable.

END OF TASK

END OF WORK PACKAGE

FIELD MAINTENANCE
BRANCHED WIRING HARNESS REPAIR

INITIAL SETUP:

Tools and Special Tools
- Tool Kit, General Mechanic's (WP 0096, Table 1, Item 1)
- Crimping Tool, Terminal (WP 0096, Table 1, Item 3)

References
- TB SIG 222

Equipment Condition
- Parked on level surface
- Wheels chocked (WP 0005)
- Handbrake applied
- Intervehicular cable disconnected from towing vehicle (WP 0005)

GENERAL

This work package contains typical repair instructions for wiring harnesses and cables (leads). Repair of wiring harness and cables consists of replacement of defective connectors, shells, and terminals, or taping cut or worn insulation and exposed wire conductors. Exploded views are provided of typical harness and cable connectors used on the trailer, and procedures are given for disassembly and assembly of connectors. When soldering is required, procedures in TB SIG 222 must be followed. If multiple pin connectors are disassembled, tag or label all wires and cables to ensure that correct connections are made at time of assembly.

TYPICAL PANEL MOUNTING RECEPTACLE REPLACEMENT

1. Remove nut (Figure 1, Item 7) from shell assembly (Figure 1, Item 4), and slide back on cable (Figure 1, Item 8).
2. Push grommet (Figure 1, Item 2) back on cable leads (Figure 1, Item 1).
3. Push contacts (Figure 1, Item 6) out through rear of insert (Figure 1, Item 5) with pin extractor.
4. Push insert (Figure 1, Item 5) out through rear of shell (Figure 1, Item 4).
5. Unsolder cable leads (Figure 1, Item 1) from contacts (Figure 1, Item 6).
6. Remove grommet (Figure 1, Item 2) from cable leads (Figure 1, Item 1).
7. Strip cable insulation from leads (Figure 1, Item 1) equal to depth of solder wells of contacts (Figure 1, Item 6).
8. Slide grommet (Figure 1, Item 2) over cable leads (Figure 1, Item 1).
9. Insert cable leads (Figure 1, Item 1) into solder wells of contacts (Figure 1, Item 6) and solder.
10. Push insert (Figure 1, Item 5) into shell (Figure 1, Item 4) from rear until seated. Groove (Figure 1, Item 3) in insert must be aligned with guide in shell to ensure proper fit.
11. Push contacts (Figure 1, Item 6) into insert (Figure 1, Item 5) from rear until seated.
12. Push grommet (Figure 1, Item 2) down cable leads (Figure 1, Item 1) and over solder wells of contacts (Figure 1, Item 6).
13. Install nut (Figure 1, Item 7) on shell assembly (Figure 1, Item 4).

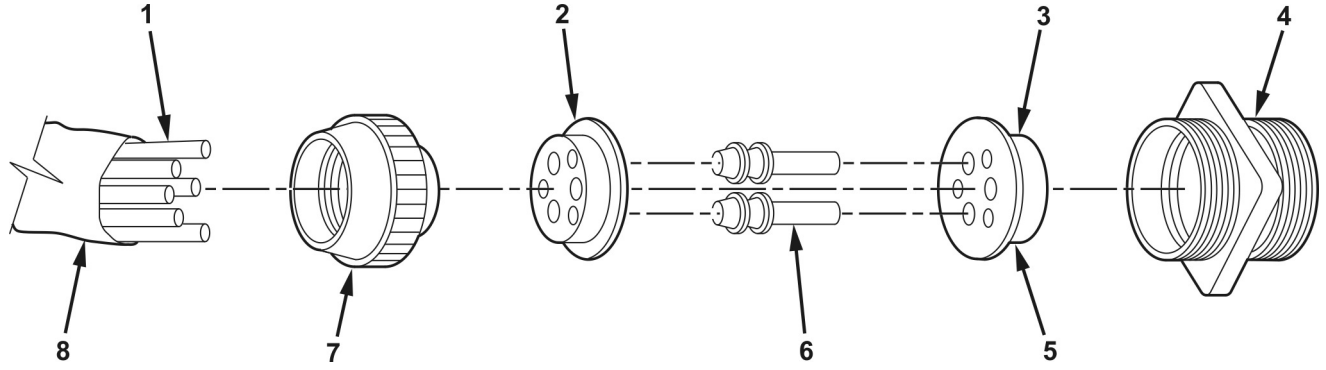

Figure 1. Typical Panel Mounting Receptacle Replacement.

END OF TASK

TYPICAL PLUG REPLACEMENT

1. Remove nut (Figure 2, Item 8) from shell assembly (Figure 2, Item 5), and slide back on cable (Figure 2, Item 9).
2. Push grommet (Figure 2, Item 2) back on cable leads (Figure 2, Item 1).
3. Slide coupling nut (Figure 2, Item 7) off shell assembly (Figure 2, Item 5).
4. Push contacts (Figure 2, Item 3) out through rear of insert (Figure 2, Item 6) with pin extractor.
5. Push insert (Figure 2, Item 6) out through rear of shell (Figure 2, Item 5).
6. Unsolder cable leads (Figure 2, Item 1) from contacts (Figure 2, Item 3).

TYPICAL PLUG REPLACEMENT - Continued

7. Remove coupling nut (Figure 2, Item 7) and grommet (Figure 2, Item 2) from cable (Figure 2, Item 9).
8. Strip cable insulation from leads (Figure 2, Item 1) equal to depth of solder wells of contacts (Figure 2, Item 3).
9. Slip grommet (Figure 2, Item 2) over cable leads (Figure 2, Item 1).
10. Insert cable leads (Figure 2, Item 1) into solder wells of contacts (Figure 2, Item 3) and solder.
11. Slide coupling nut (Figure 2, Item 7) over contacts (Figure 2, Item 3) at cable leads (Figure 2, Item 1).
12. Push insert (Figure 2, Item 6) into shell (Figure 2, Item 5) from rear until seated. Groove (Figure 2, Item 4) in insert must be aligned with guide in shell to ensure proper fit.
13. Push contacts (Figure 2, Item 3) into insert (Figure 2, Item 6) from rear until seated.
14. Slide coupling nut (Figure 2, Item 7) onto shell assembly (Figure 2, Item 5).
15. Push grommet (Figure 2, Item 2) down cable leads (Figure 2, Item 1) and over solder wells of contacts (Figure 2, Item 3).
16. Install nut (Figure 2, Item 8) on shell assembly (Figure 2, Item 5).

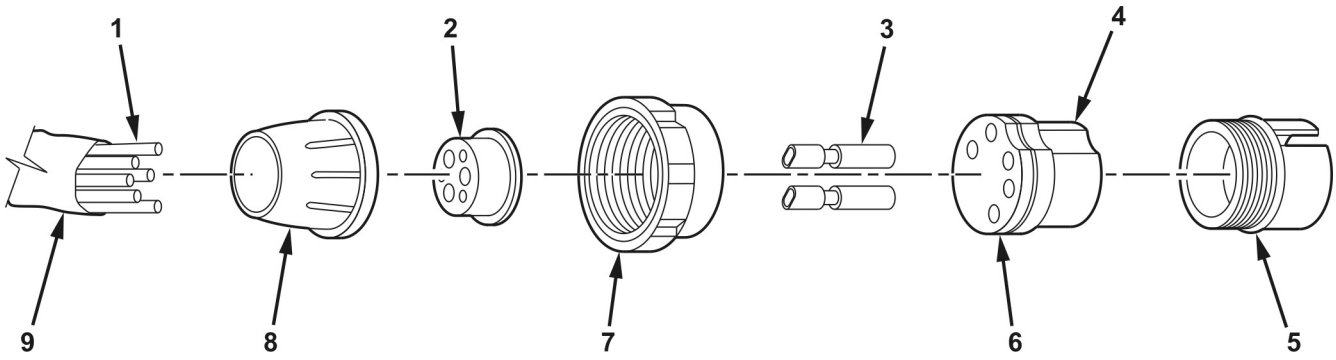

Figure 2. Typical Plug Replacement.

END OF TASK

TERMINAL-TYPE CABLE CONNECTOR REPLACEMENT

1. Strip insulation from cable (Figure 3, Item 1) equal to depth of terminal (Figure 3, Item 3) well.
2. Slide insulator (Figure 3, Item 2) over cable (Figure 3, Item 1).
3. Insert cable (Figure 3, Item 1) into terminal (Figure 3, Item 3) well, and crimp.
4. Slide insulator (Figure 3, Item 2) over crimped end of terminal (Figure 3, Item 3).

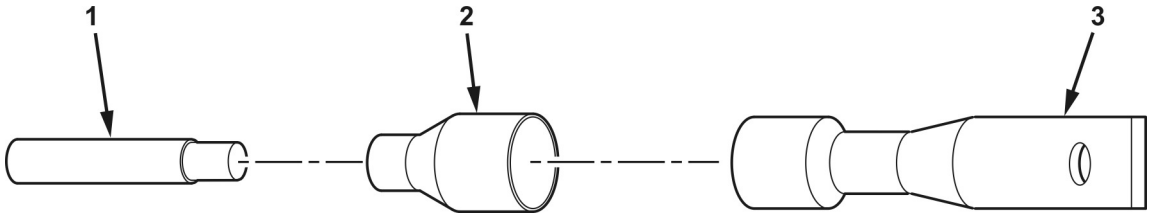

Figure 3. Terminal-Type Cable Connector Replacement.

END OF TASK

MALE CABLE CONNECTOR REPLACEMENT

1. Strip insulation from cable (Figure 4, Item 1) equal to depth of ferrule (Figure 4, Item 4).
2. Slide shell (Figure 4, Item 2) over cable (Figure 4, Item 1) and remove C-washer (Figure 4, Item 3).
3. Insert cable (Figure 4, Item 1) into ferrule (Figure 4, Item 4) well, and crimp.
4. Place C-washer (Figure 4, Item 3) at crimped junction, and slide shell (Figure 4, Item 2) over C-washer and ferrule.

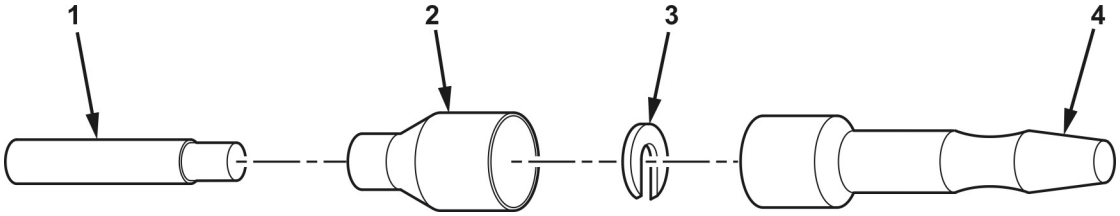

Figure 4. Male Cable Connector Replacement.

END OF TASK

FEMALE CABLE CONNECTOR (WITH WASHER) REPLACEMENT

1. Strip insulation from cable (Figure 5, Item 1) approximately 1/8 in. (3 mm).
2. Slide shell (Figure 5, Item 2) and washer (Figure 5, Item 3) over cable (Figure 5, Item 1).
3. Place cable (Figure 5, Item 1) into cylindrical end of terminal (Figure 5, Item 4), and crimp.
4. Slide shell (Figure 5, Item 2) and washer (Figure 5, Item 3) over terminal (Figure 5, Item 4).

FEMALE CABLE CONNECTOR (WITH WASHER) REPLACEMENT - Continued

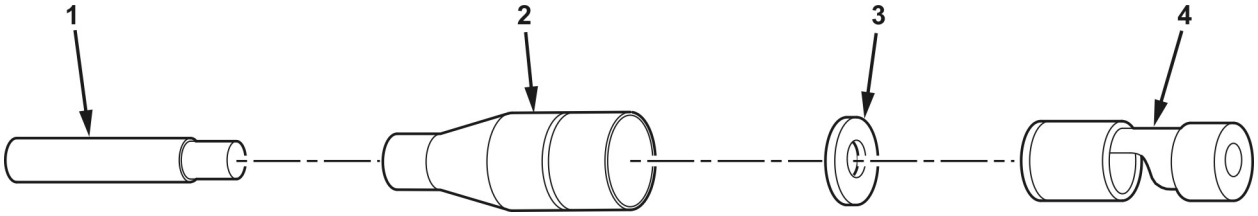

Figure 5. Female Cable Connector (With Washer) Replacement.

END OF TASK

FEMALE CABLE CONNECTOR (WITH SLEEVE) REPLACEMENT

1. Strip insulation from cable (Figure 6, Item 1) approximately 1/8 in. (3 mm).
2. Slide shell (Figure 6, Item 2) and sleeve (Figure 6, Item 3) over cable (Figure 6, Item 1).
3. Place cable (Figure 6, Item 1) into cylindrical end of terminal (Figure 6, Item 4), and crimp.
4. Slide shell (Figure 6, Item 2) and sleeve (Figure 6, Item 3) over terminal (Figure 6, Item 4).

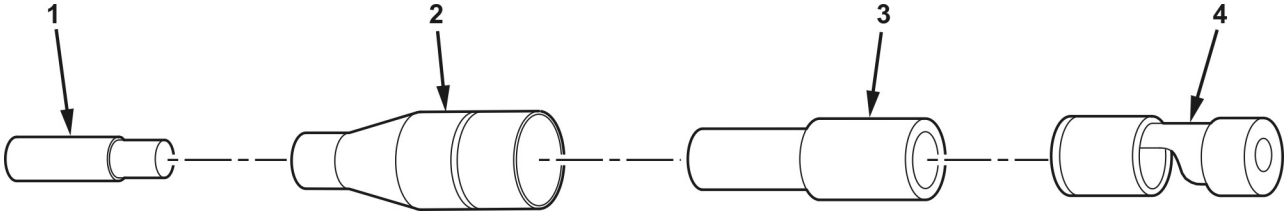

Figure 6. Female Cable Connector (With Sleeve) Replacement.

END OF TASK

END OF WORK PACKAGE

FIELD MAINTENANCE
INTERVEHICULAR CABLE REPLACEMENT

INITIAL SETUP:

Tools and Special Tools
Tool Kit, General Mechanic's (WP 0096, Table 1, Item 1)
Tool Kit, Blind Riveter (WP 0096, Table 1, Item 12)

Materials/Parts
Tag, Marker (WP 0095, Table 1, Item 30)

Materials/Parts (cont.)
Rivet (WP 0072, Figure 4, Item 2)
Screw, Self-Tapping (WP 0069, Figure 1, Item 3)

Equipment Condition
Intervehicular cable disconnected from towing vehicle (WP 0005)

REMOVAL

NOTE

Tag wires for installation if marker bands are missing or illegible.

1. Remove rivet (Figure 1, Item 4) securing cable clamp (Figure 1, Item 1) to trailer frame. Discard rivet.
2. Remove cable clamp (Figure 1, Item 1) securing intervehicular cable (Figure 1, Item 3) to trailer frame.
3. Remove screw (Figure 1, Item 5) securing ground wire (Figure 1, Item 6) to trailer frame (Figure 1, Item 2). Discard screw.
4. Tag and disconnect intervehicular cable (Figure 1, Item 3) from branched wiring harness (Figure 1, Item 2) junction and install intervehicular cable in trailer frame.

END OF TASK

INSTALLATION

CAUTION

Ensure proper alignment of intervehicular cable to avoid damage to intervehicular cable as it passes through the trailer frame.

1. Connect intervehicular cable (Figure 1, Item 3) to branched wiring harness (Figure 1, Item 2).
2. Install new screw (Figure 1, Item 5) securing ground wire (Figure 1, Item 6) to trailer frame (Figure 1, Item 2).
3. Install new rivet (Figure 1, Item 4) and cable clamp (Figure 1, Item 1), securing intervehicular cable (Figure 1, Item 3) to trailer frame.

INSTALLATION - Continued

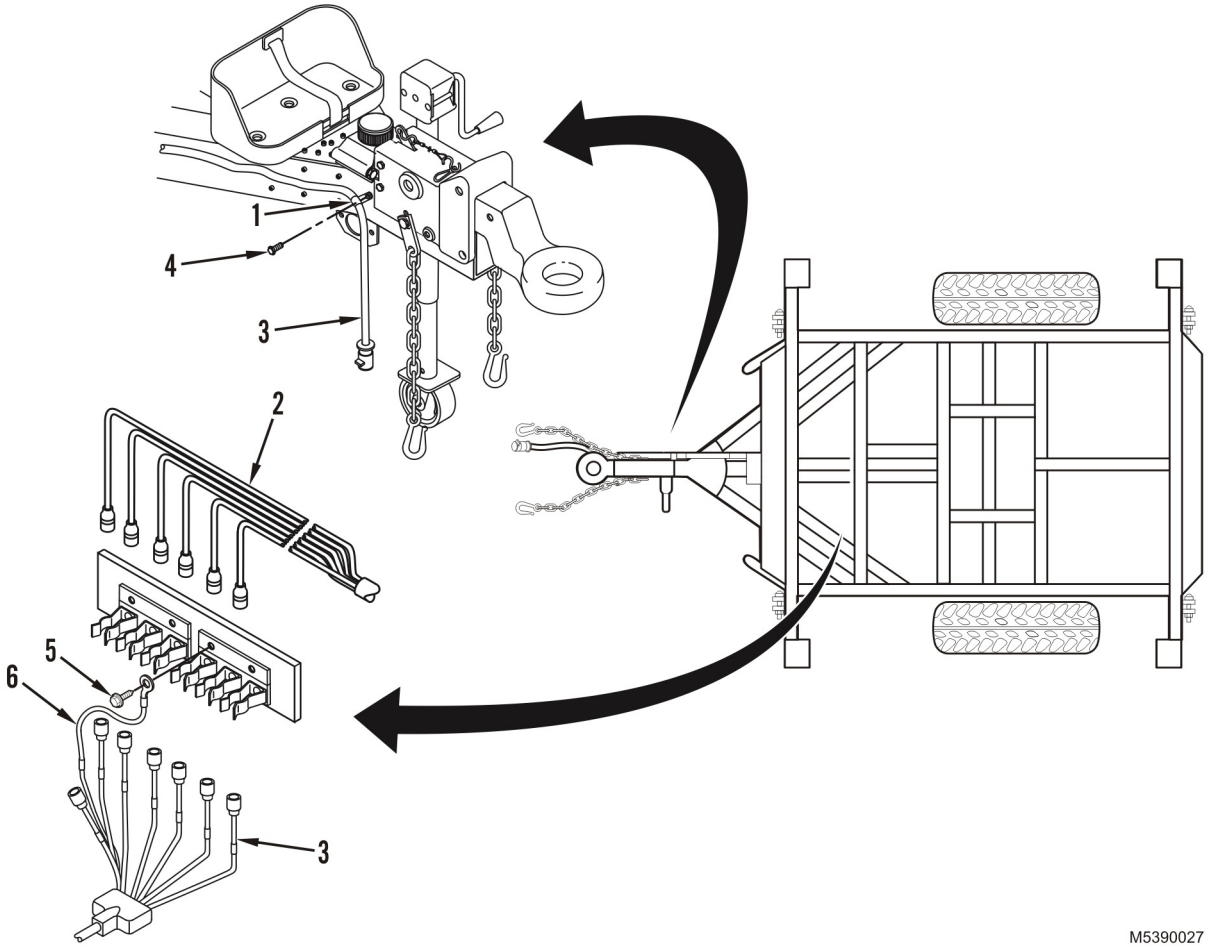

Figure 1. Intervehicular Cable Removal and Installation.

END OF TASK

FOLLOW-ON MAINTENANCE

1. Connect intervehicular cable to towing vehicle (WP 0005).
2. Check operation of light.

END OF TASK

END OF WORK PACKAGE

FIELD MAINTENANCE
AXLE ASSEMBLY INSPECTION AND REPLACEMENT

INITIAL SETUP:

Tools and Special Tools
- Tool Kit, General Mechanic's (WP 0096, Table 1, Item 1)
- Jack, Hydraulic (WP 0096, Table 1, Item 9)
- Jack Stand (4) (WP 0096, Table 1, Item 10)
- Wrench, Torque: 1/2-in. drive, 30-250 lb-ft (WP 0096, Table 1, Item 14)

Materials/Parts
- Locknut Qty: 8 (WP 0073, Figure 5, Item 4)

Personnel Required
- (2)

References
- WP 0007
- WP 0008

References (cont.)
- WP 0038
- WP 0045
- WP 0041
- WP 0046
- WP 0050

Equipment Condition
- Parked on level surface
- Wheels chocked (WP 0005)
- Handbrake applied
- Intervehicular cable disconnected from towing vehicle (WP 0005)
- Trailer emptied

INSPECTION

NOTE

It is essential that the trailer is empty.

1. Measure shock absorber extension rod (Figure 1, Item 1). If the exposed extension rod on either absorber measures less than 2.25 in. (69.9 mm), replace axle. If the difference between the two extension rods is 0.75 in. (19 mm) or greater, replace axle.
2. Ensure that eight axle mounting locknuts (Figure 1, Item 4) on two axle mounting brackets (Figure 1, Item 5) are torqued to 130 lb-ft (176 N•m).
3. Check axle mounting brackets (Figure 1, Item 3) and axle mounts (Figure 1, Item 5) for evidence of making contact with shock absorbers (Figure 1, Item 2). Any contact between shock absorbers and axle mounts requires replacement of axle. If shock absorbers are damaged or leaking, replace (WP 0050).
4. Inspect flex brake line (Figure 1, Item 6) for cracks or leaks. Replace as necessary (WP 0045).

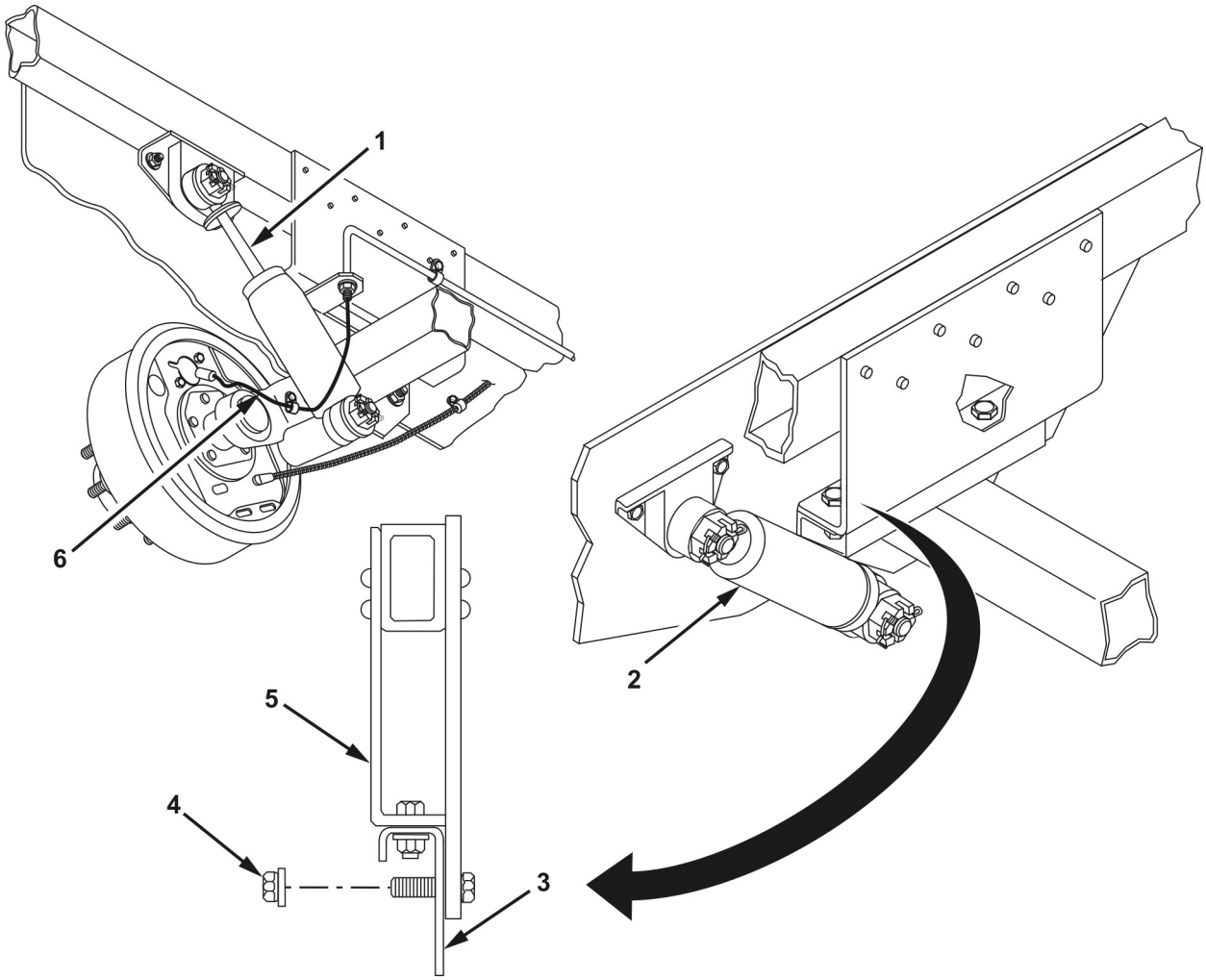

Figure 1. Axle Assembly Inspection.

END OF TASK

REMOVAL

WARNING

- **DO NOT handle brakeshoes, brakedrums. or other brake components unless area has been properly cleaned. There may be hazardous dust on these components, which can be dangerous if you touch it or breathe it. Wear an approved filter mask and gloves. NEVER use compressed air or a dry brush to clean brake components. Dust may be removed using an industrial-type vacuum cleaner. Clean dust or mud away from brake components with water and a wet, soft brush or cloth. Failure to comply may result in personnel death or injury. Seek medical attention in event of injury.**
- **A scissor jack is used for raising and lowering and is NOT used to support the vehicle. Never work under vehicle unless wheels are chocked and it is properly supported – the vehicle may suddenly shift or move. Failure to comply may result in personnel injury or equipment damage. Seek medical attention in event of injury.**

1. Place trailer on jack stands on all four corners.
2. Remove wheels (WP 0007) or (WP 0008).
3. Remove hubs/drums (WP 0046).
4. Remove brakeshoes and backing plates (WP 0038).
5. Remove shock absorbers (WP 0050).

REMOVAL - Continued

6. Position floor jack (Figure 2, Item 1) under rear of trailer and place jack saddle under middle of axle (Figure 2, Item 2).

WARNING

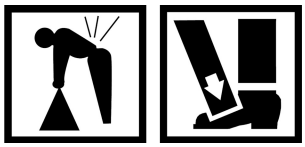

Axle handling is normally a two-person task. A third person may be required. The axle weight is 190 lb (86 kg). Use caution when handling the axle. Failure to comply may result in personnel injury or equipment damage. Seek medical attention in event of injury.

7. Remove four locknuts (Figure 2, Item 5), four flat washers (Figure 2, Item 4), and four capscrews (Figure 2, Item 3) from top axle mounts. Discard locknuts.
8. Remove four locknuts (Figure 2, Item 7), four flat washers (Figure 2, Item 4), and four capscrews (Figure 2, Item 6) from side axle mounts. Discard locknuts.
9. Carefully lower axle (Figure 2, Item 1) and remove from trailer.
10. Check eight frame/axle mounting holes (Figure 2, Item 8) for damage. If damaged, notify Field Maintenance.

END OF TASK

INSTALLATION

WARNING

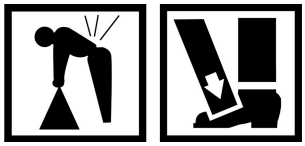

Axle handling is normally a two-person task. A third person may be required. The axle weight is 190 lb (86 kg). Use caution when handling the axle. Failure to comply may result in personnel injury or equipment damage. Seek medical attention in event of injury.

1. Place axle (Figure 2, Item 1) on hydraulic jack (Figure 2, Item 2) and roll jack (axle) under trailer.
2. Raise axle (Figure 2, Item 1) to frame and align eight axle mounting holes (Figure 2, Item 8).

NOTE

Before tightening top axle mount locknuts, ensure holes align in side axle mounts.

3. Install four capscrews (Figure 2, Item 3), four flat washers (Figure 2, Item 4), and four new locknuts (Figure 2, Item 5) to top axle mounts. Tighten nuts and torque to 130 lb-ft (176 N•m).
4. Install four capscrews (Figure 2, Item 6), four flat washers (Figure 2, Item 4), and four new locknuts (Figure 2, Item 7) to side axle mounts. Tighten nuts and torque to 142 lb-ft (192 N•m).

INSTALLATION - Continued

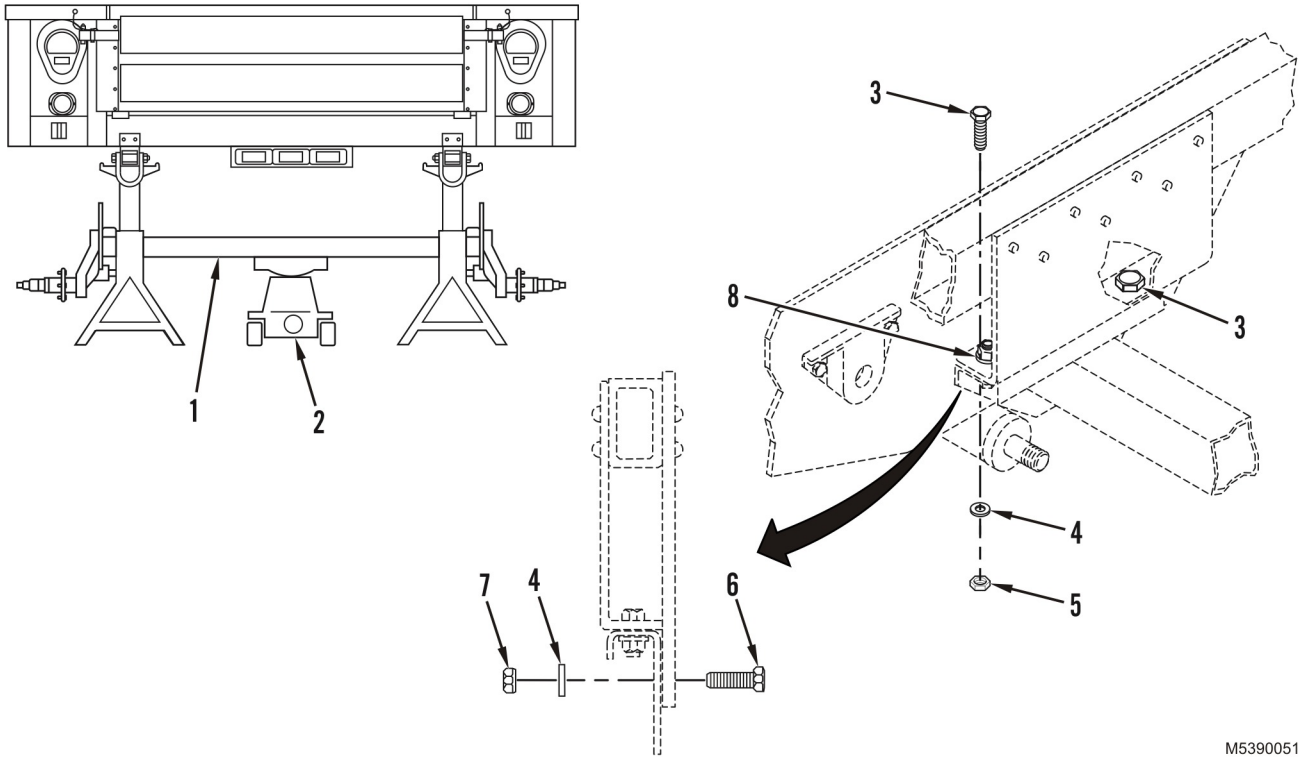

Figure 2. Axle Assembly Removal and Installation.

END OF TASK

FOLLOW-ON MAINTENANCE

1. Install brakeshoes and backing plates (WP 0038).
2. Install hub/drum on axle (WP 0046).
3. Install wheel on hub/drum (WP 0007) or (WP 0008).
4. Install shock absorber (WP 0050).
5. Bleed hydraulic system (WP 0041).
6. Adjust service brakes (WP 0038).
7. Adjust handbrakes (WP 0005).

END OF TASK

END OF WORK PACKAGE

FIELD MAINTENANCE
HANDBRAKE LEVER REPLACEMENT

INITIAL SETUP:

Tools and Special Tools
Tool Kit, General Mechanic's (WP 0096, Table 1, Item 1)

Materials/Parts
Cleaning Solvent, Type II (WP 0095, Table 1, Item 6)
Cotter Pin (WP 0074, Figure 6, Item 8)
Locknut Qty: 2 (WP 0074, Figure 6, Item 9)

References
WP 0037
WP 0064

Equipment Condition
Parked on level surface
Handbrake applied
Intervehicular cable disconnected from towing vehicle (WP 0005)

WARNING

When performing maintenance on brake system, ensure that wheels are securely chocked. Failure to comply may cause trailer to roll, resulting in personnel death or injury, or equipment damage. Seek medical attention in event of injury.

REMOVAL

1. Chock front and rear of both wheels.
2. Turn adjustment knob (Figure 1, Item 8) counterclockwise on handbrake lever (Figure 1, Item 7) to be removed to provide slack in cable.
3. Remove cotter pin (Figure 1, Item 9) from clevis pin (Figure 1, Item 1), and remove clevis pin from handbrake lever assembly (Figure 1, Item 6). Discard cotter pin.
4. Disconnect handbrake cable and sheath assembly (Figure 1, Item 2) from handbrake lever assembly (Figure 1, Item 6).
5. Remove two locknuts (Figure 1, Item 3), two washers (Figure 1, Item 4), and two capscrews (Figure 1, Item 5) securing handbrake lever assembly (Figure 1, Item 6) to frame. Discard locknuts.

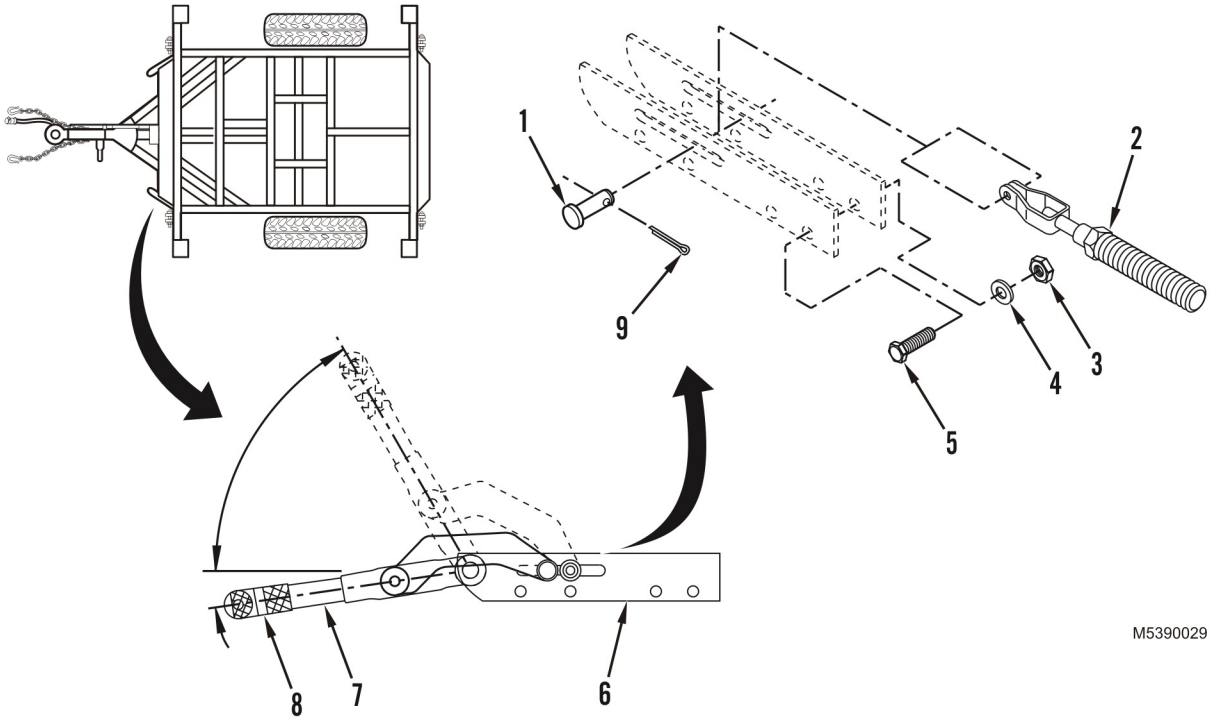

Figure 1. Handbrake Lever Removal.

END OF TASK

CLEANING AND INSPECTION

WARNING

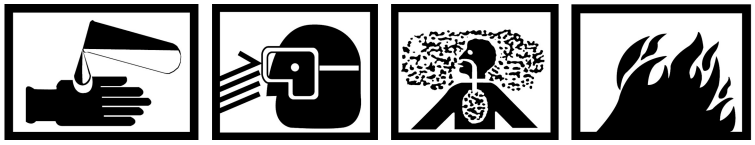

- **Solvent cleaning compound MIL-PRF-680 may be irritating to the eyes and skin. Wear protective gloves and goggles. First aid for skin contact: remove contaminated clothing. Wash skin thoroughly with soap and water. First aid for eye contact: flush with water for 15 minutes or until irritation subsides. If symptoms persist, seek medical attention. Failure to comply may result in personnel death or injury. Seek medical attention in event of injury.**
- **Use solvent cleaning compound MIL-PRF-680 in a well-ventilated area. Use respirator as needed. Accidental ingestion can cause irritation of digestive tract and respiratory tract. May cause lung and central nervous system damage. Can be fatal if swallowed. Inhalation of high/massive concentrations can cause coma or be fatal. First aid for ingestion: DO NOT induce vomiting. Seek immediate medical attention. First aid for inhalation: move to fresh air. If not breathing, provide artificial respiration. If symptoms persist, seek medical attention. Failure to comply may result in personnel death or injury. Seek medical attention in event of injury.**
- **MIL-PRF-680 solvent is combustible; DO NOT use or store near heat, sparks, flame, or other ignition sources. Use mechanical ventilation whenever product is used in a confined space, heated above ambient temperatures, or agitated. Keep container sealed when not in use. Failure to comply may result in personnel death or injury. Seek medical attention in event of injury.**
- **Improper cleaning methods and use of unauthorized cleaning liquids or solvents can injure personnel and damage equipment. Failure to comply may result in personnel death or injury. Seek medical attention in event of injury.**
- **Cloths or rags saturated with solvent cleaning compound must be disposed of in accordance with authorized facility procedures. Failure to comply may result in personnel death or injury. Seek medical attention in event of injury.**

1. Clean all removed components with cleaning solvent (WP 0095, Table 1, Item 6), and allow to dry.

CLEANING AND INSPECTION - Continued

2. Inspect handbrake cable end (Figure 2, Item 2) for excessive wear or damage. Replace if defective (WP 0037).
3. Inspect clevis pin (Figure 2, Item 1) for excessive wear or damage. Replace if defective.
4. Inspect cable assembly for frays, cracks, distortion, or seized cable in sheath (Figure 2, Item 3). Replace cable assembly if damaged (WP 0037).
5. Inspect all threaded surfaces for damage. Replace any component with damaged threads.

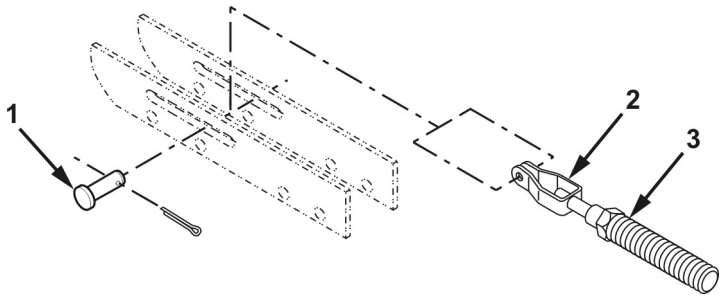

Figure 2. Handbrake Lever Cleaning and Inspection.

END OF TASK

INSTALLATION

1. Connect handbrake lever (Figure 3, Item 8) to cable end (Figure 3, Item 2).
2. Install two capscrews (Figure 3, Item 6), two washers (Figure 3, Item 5), and two new locknuts (Figure 3, Item 4) securing handbrake lever assembly (Figure 3, Item 7) to frame.
3. Install clevis pin (Figure 3, Item 1) in handbrake lever assembly (Figure 3, Item 7), securing handbrake cable (Figure 3, Item 2) and handbrake cable sheath (Figure 3, Item 3) to handbrake lever assembly.
4. Install new cotter pin (Figure 3, Item 10) in clevis pin (Figure 3, Item 1).
5. Turn adjustment knob (Figure 3, Item 9) clockwise until handbrake lever (Figure 3, Item 8) has one-third slack travel from the disengaged position to the engaged position (Figure 4).

INSTALLATION - Continued

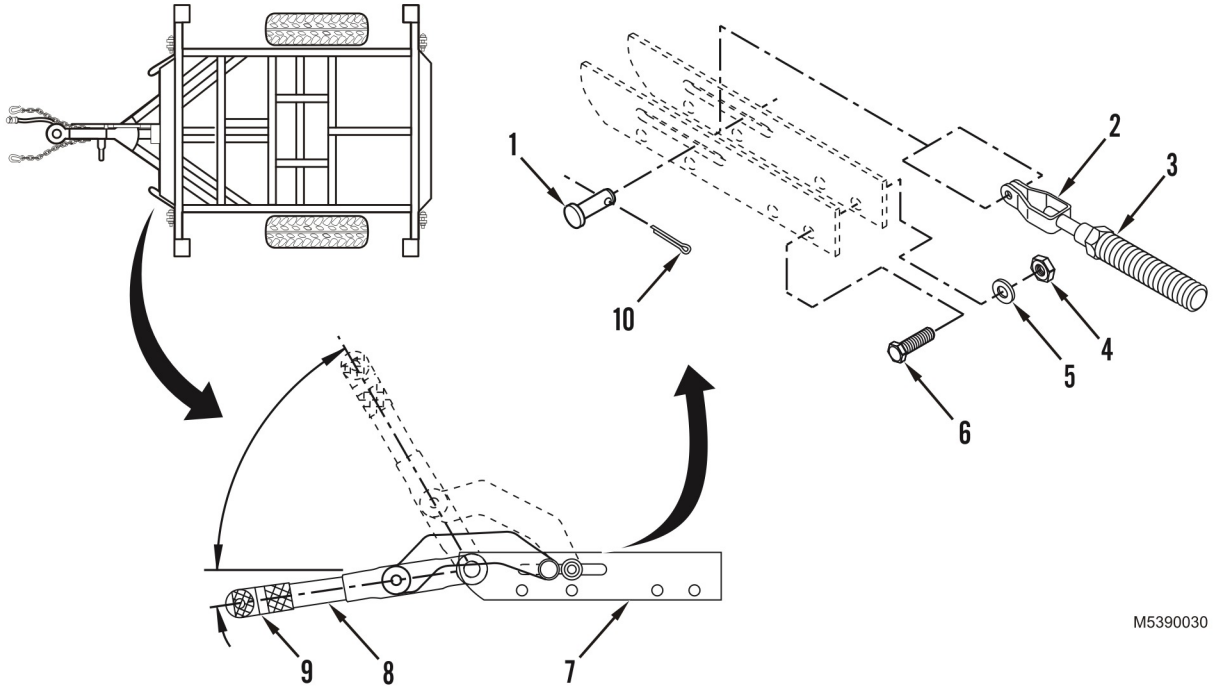

Figure 3. Handbrake Lever Installation.

INSTALLATION - Continued

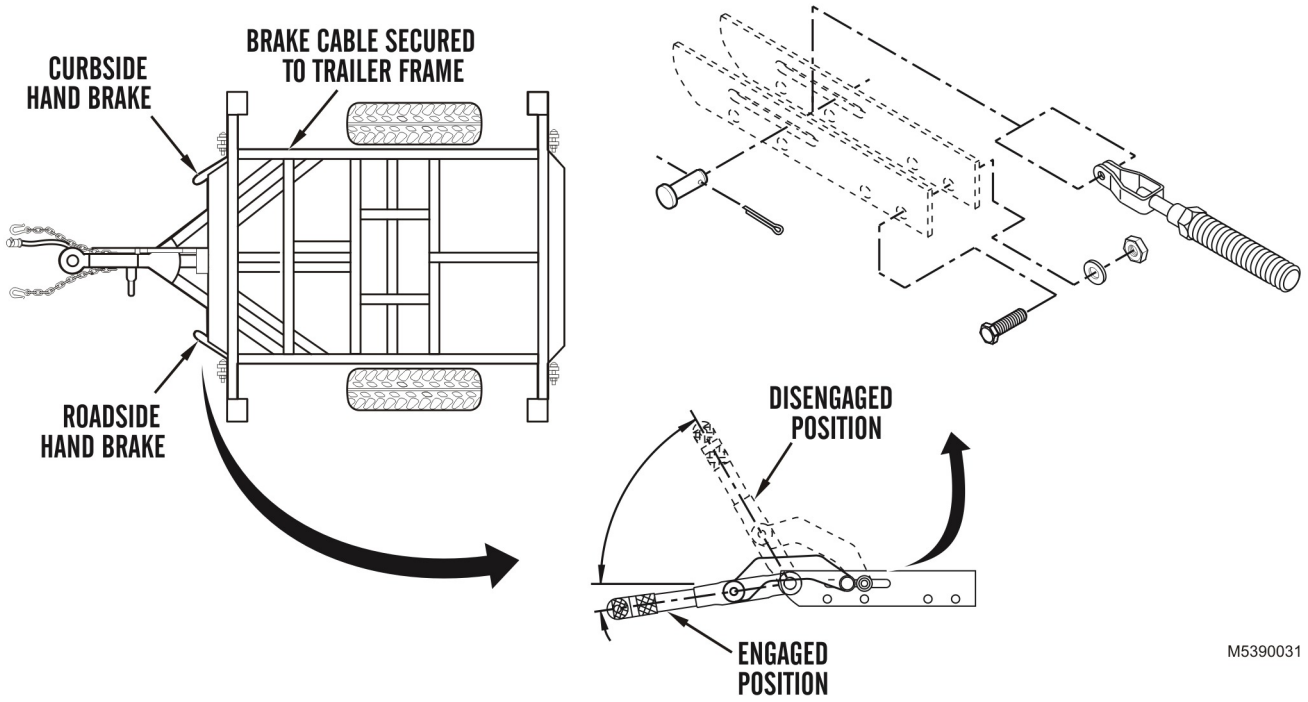

Figure 4. Handbrake Lever Engaged/Disengaged.

END OF TASK

FOLLOW-ON MAINTENANCE

1. Lubricate handbrake lever and linkage (WP 0064).
2. Adjust handbrake (WP 0005).

END OF TASK

END OF WORK PACKAGE

FIELD MAINTENANCE
HANDBRAKE CABLE AND SHEATH REPLACEMENT

INITIAL SETUP:

Tools and Special Tools
Tool Kit, General Mechanic's (WP 0096, Table 1, Item 1)
Tool Kit, Blind Riveter (WP 0096, Table 1, Item 12)

Materials/Parts
Cotter Pin (WP 0074, Figure 6, Item 8)
Rivet (WP 0074, Figure 6, Item 4)

References
WP 0024
WP 0064

Equipment Condition
Wheels removed (Old Jack) (WP 0007)
Wheels removed (New Jack) (WP 0008)
Hub/drum removed (WP 0046)

WARNING

When performing maintenance on brake system, ensure that wheels are securely chocked. Failure to comply may cause trailer to roll, resulting in personnel death or injury, or equipment damage. Seek medical attention in event of injury.

REMOVAL

1. Chock wheel on side of trailer opposite side on which brake cable is being replaced (WP 0005).
2. Turn adjustment knob (Figure 1, Item 8) counterclockwise on handbrake lever (Figure 1, Item 7) to loosen handbrake cable.
3. Remove cotter pin (Figure 1, Item 3) and clevis pin (Figure 1, Item 6) securing handbrake cable end (Figure 1, Item 4) to handbrake lever (Figure 1, Item 7). Discard cotter pin (Figure 1, Item 3). Check clevis pin (Figure 1, Item 6) for damage. Replace if defective.
4. Remove handbrake cable end (Figure 1, Item 4) from handbrake lever (Figure 1, Item 7).
5. Disconnect handbrake cable end (Figure 1, Item 2) from parking brake link (Figure 1, Item 1).
6. Disconnect handbrake cable sheath (Figure 1, Item 5) from backing plate (Figure 1, Item 9).
7. Remove rivet (Figure 1, Item 11) and clamp (Figure 1, Item 10) securing handbrake cable sheath (Figure 1, Item 5) to frame. Remove clamp (Figure 1, Item 10) from cable sheath (Figure 1, Item 5). Discard rivet.
8. Remove handbrake cable end (Figure 1, Item 4) and handbrake cable sheath (Figure 1, Item 5) from frame.

END OF TASK

INSTALLATION

1. Connect handbrake cable end (Figure 1, Item 2) to parking brake link (Figure 1, Item 1).
2. Install new rivet (Figure 1, Item 11) and clamp (Figure 1, Item 10) securing handbrake cable sheath (Figure 1, Item 5) to frame.
3. Install handbrake cable end (Figure 1, Item 4) and handbrake cable sheath (Figure 1, Item 5) to frame.
4. Connect handbrake cable sheath (Figure 1, Item 5) to wheel backing plate (Figure 1, Item 9).
5. Connect handbrake cable end (Figure 1, Item 4) to handbrake lever (Figure 1, Item 7) with clevis pin (Figure 1, Item 6), and install new cotter pin (Figure 1, Item 3).

INSTALLATION - Continued

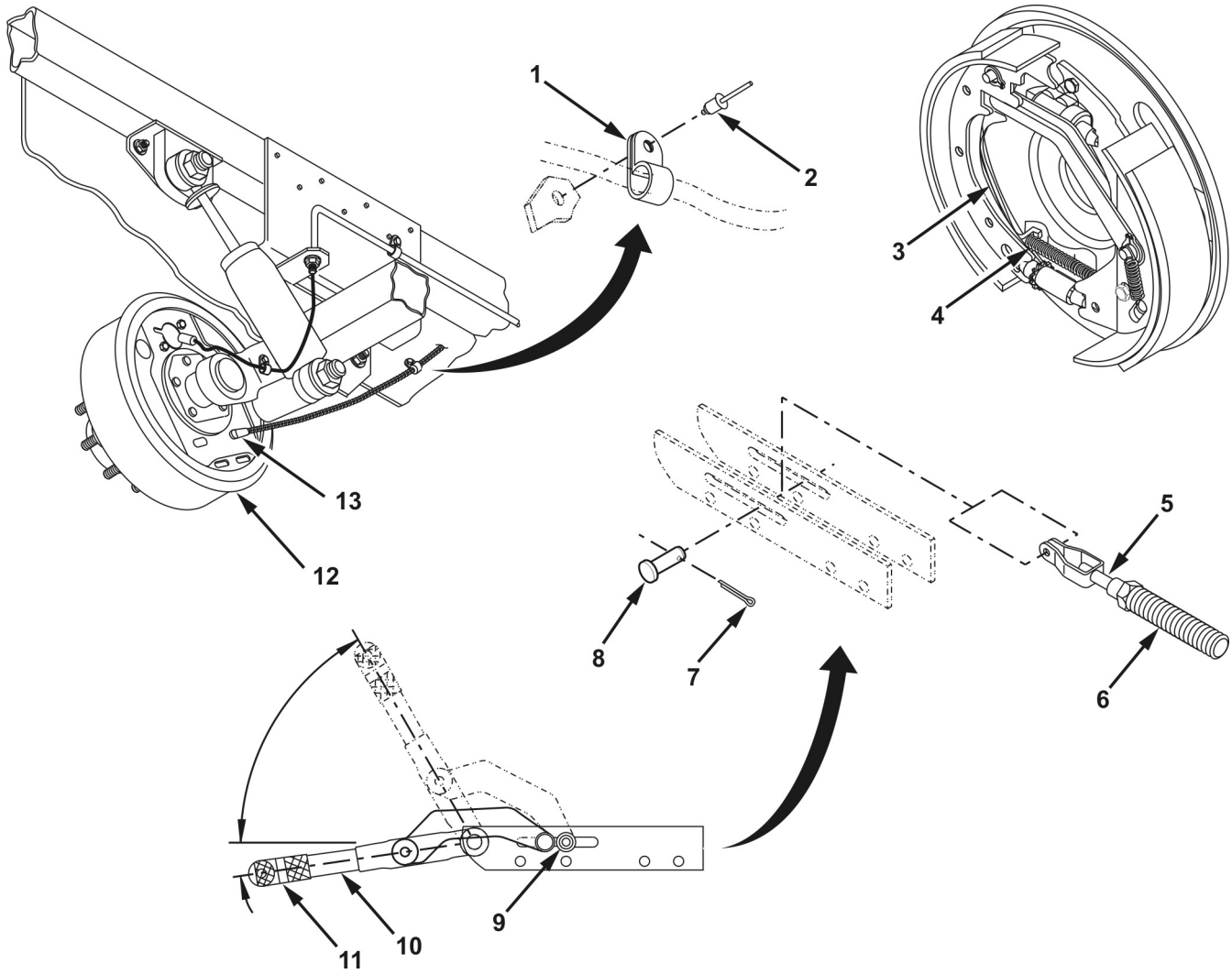

Figure 1. Handbrake Cable and Sheath Removal and Installation.

END OF TASK

FOLLOW-ON MAINTENANCE

1. Install hub/drum (WP 0046).
2. Install wheel and tire assembly (WP 0007) or (WP 0008).
3. Lubricate handbrake lever and linkage (WP 0064).
4. Adjust handbrake (WP 0024).

END OF TASK

END OF WORK PACKAGE

FIELD MAINTENANCE
SERVICE BRAKE MAINTENANCE

INITIAL SETUP:

Tools and Special Tools
- Tool Kit, General Mechanic's (WP 0096, Table 1, Item 1)
- Jack Stand (WP 0096, Table 1, Item 10)
- Wrench, Torque: 3/8-in. drive, 0-300 lb-in. (WP 0096, Table 1, Item 15)
- Wrench, Torque: 3/8-in. drive, 5-75 lb-ft (WP 0096, Table 1, Item 16)

Materials/Parts
- Cleaning Solvent, Type II (WP 0095, Table 1, Item 6)
- Rag, Wiping (WP 0095, Table 1, Item 28)
- Front Brakeshoe (WP 0075, Figure 7, Item 15)
- Locknut Qty: 2 (WP 0075, Figure 7, Item 13)

Materials/Parts (cont.)
- Rear Brakeshoe (WP 0075, Figure 7, Item 30)
- Spring Washer (WP 0075, Figure 7, Item 22)

References
- WP 0018
- WP 0039
- WP 0041

Equipment Condition
- Wheels removed (Old Jack) (WP 0007)
- Wheels removed (New Jack) (WP 0008)
- Hub/drum removed (WP 0046)

SERVICE BRAKE INSPECTION

WARNING

DO NOT handle brakeshoes, brakedrums, or other brake components unless area has been properly cleaned. There may be hazardous dust on these components, which can be dangerous if you touch it or breathe it. Wear an approved filter mask and gloves. NEVER use compressed air or a dry brush to clean brake components. Dust may be removed using an industrial-type vacuum cleaner. Clean dust or mud away from brake components with water and a wet, soft brush or cloth. Failure to comply may result in personnel death or injury. Seek medical attention in event of injury.

WARNING

Accidental or intentional introduction of liquid contaminants into the environment is a violation of state, federal, and military regulations. Refer to Army Petroleum, Oils, and Lubricants (POL) for information concerning storage, use, and disposal of these liquids. Failure to comply may cause damage to environment and health of personnel. Seek medical attention in the event of an injury.

SERVICE BRAKE INSPECTION - Continued

1. Disengage handbrake on side being worked on.
2. Inspect hydraulic wheel cylinder (Figure 1, Item 4) for leakage and corrosion. Replace if defective (WP 0039).
3. Inspect brakeshoe linings (Figure 1, Item 1) for cracks or signs of grease or brake fluid. Replace if defective.
4. Measure brakeshoe lining thickness (Figure 1, Item 2). Thickness must be 0.125 in. (3 mm) minimum. Replace if thickness is less than 0.125 in. (3 mm).
5. Inspect brake adjuster (Figure 1, Item 3) for corrosion and for freedom of movement. Replace if defective.

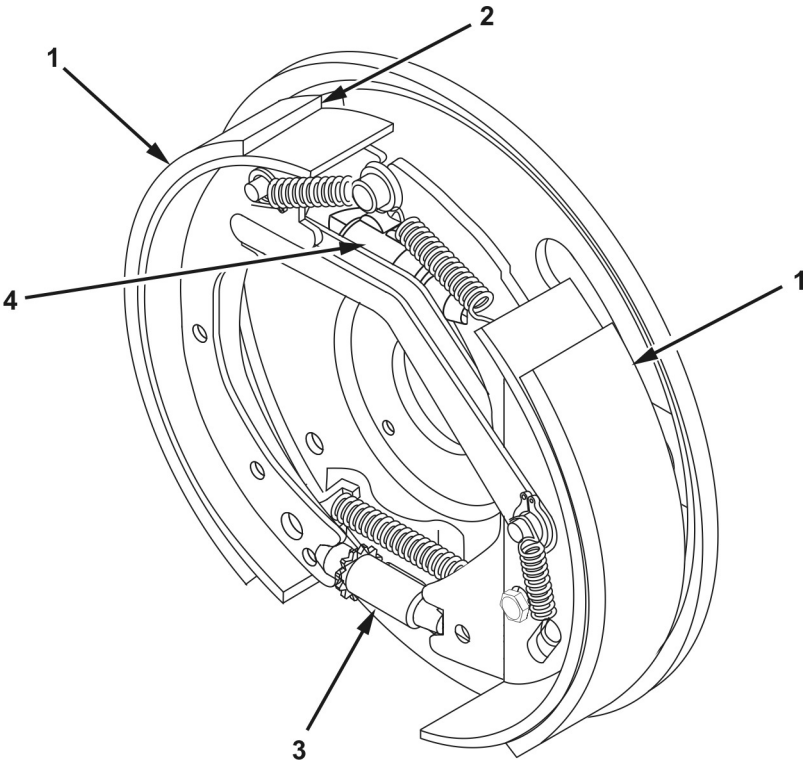

Figure 1. Brakeshoe Inspection.

6. Inspect grease seal (Figure 2, Item 2) for signs of leakage. Replace if defective (WP 0046).
7. Inspect braking surface (Figure 2, Item 1) for cracks, heat checking, and scoring. Discard brakedrum if braking surface is damaged.
8. Inspect eight studs and stud holes (Figure 2, Item 3) for damage and cracks. Discard and replace studs if defective (WP 0046). Discard brakedrum if cracks or medium to heavy scoring are present.

WARNING

DO NOT use a brakedrum that exceeds maximum wear specifications. Failure to comply may result in brake failure or in personnel death or injury. Seek medical attention in event of injury.

9. Inspect braking surface (Figure 2, Item 1) for out-of-round condition. Discard brakedrum if out-of-round.
10. Measure inside diameter of brakedrum (Figure 2, Item 4). Discard brakedrum if inside diameter exceeds 12.09 in. (30.7 cm).

SERVICE BRAKE INSPECTION - Continued

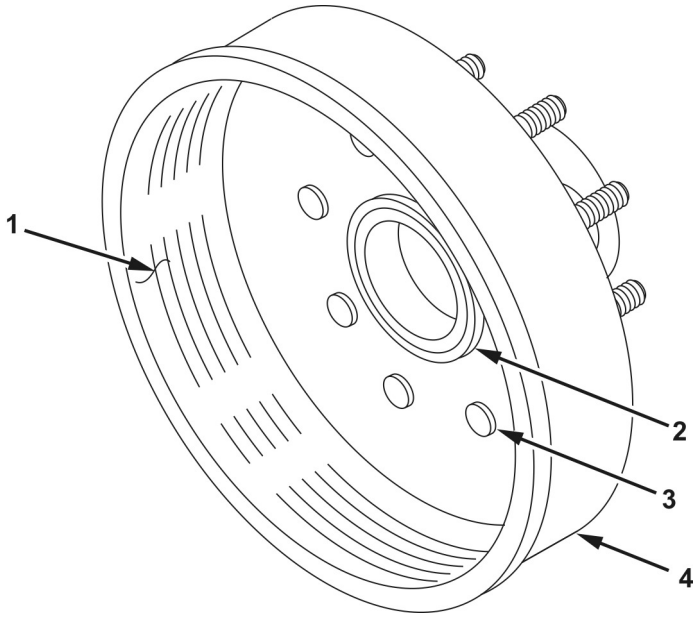

Figure 2. Brakedrum Inspection.

END OF TASK

FOLLOW-ON MAINTENANCE

NOTE

If inspection requires repair or maintenance, do not perform follow-on maintenance and proceed to SERVICE BRAKE DISASSEMBLY on the next page.

1. Install hub/drums (WP 0046).
2. Install wheel and tire assemblies (WP 0007) or (WP 0008).

END OF TASK

SERVICE BRAKESHOE DISASSEMBLY

WARNING

DO NOT handle brakeshoes, brakedrums, or other brake components unless area has been properly cleaned. There may be hazardous dust on these components, which can be dangerous if you touch it or breathe it. Wear an approved filter mask and gloves. NEVER use compressed air or a dry brush to clean brake components. Dust may be removed using an industrial-type vacuum cleaner. Clean dust or mud away from brake components with water and a wet, soft brush or cloth. Failure to comply may result in personnel death or injury. Seek medical attention in event of injury.

1. Remove front shoe spring (Figure 3, Item 6) from front brakeshoe (Figure 3, Item 3) and anchor pin (Figure 3, Item 2).
2. Remove rear shoe spring (Figure 3, Item 7) from rear brakeshoe (Figure 3, Item 1) and anchor pin (Figure 3, Item 2).
3. Remove washer (Figure 3, Item 8) from anchor pin (Figure 3, Item 2).
4. Remove handbrake cable (Figure 3, Item 4) from parking brake link (Figure 3, Item 5).

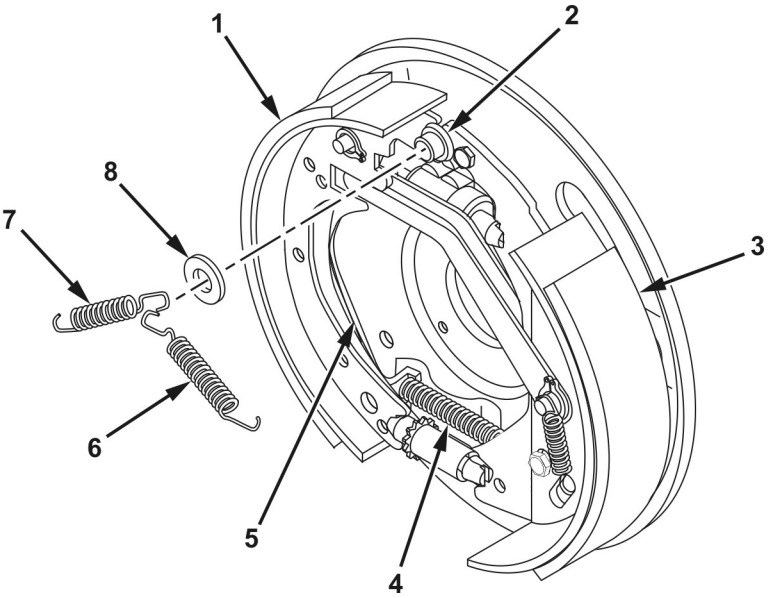

Figure 3. Front/Rear Shoe Spring Removal.

5. Remove two retainers (Figure 4, Item 5), spring (Figure 4, Item 6), and pin (Figure 4, Item 3) securing front brakeshoe (Figure 4, Item 4) to backing plate (Figure 4, Item 1).
6. Remove two retainers (Figure 4, Item 5), spring (Figure 4, Item 7), and pin (Figure 4, Item 2) securing rear brakeshoe (Figure 4, Item 8) to backing plate (Figure 4, Item 1).

SERVICE BRAKESHOE DISASSEMBLY - Continued

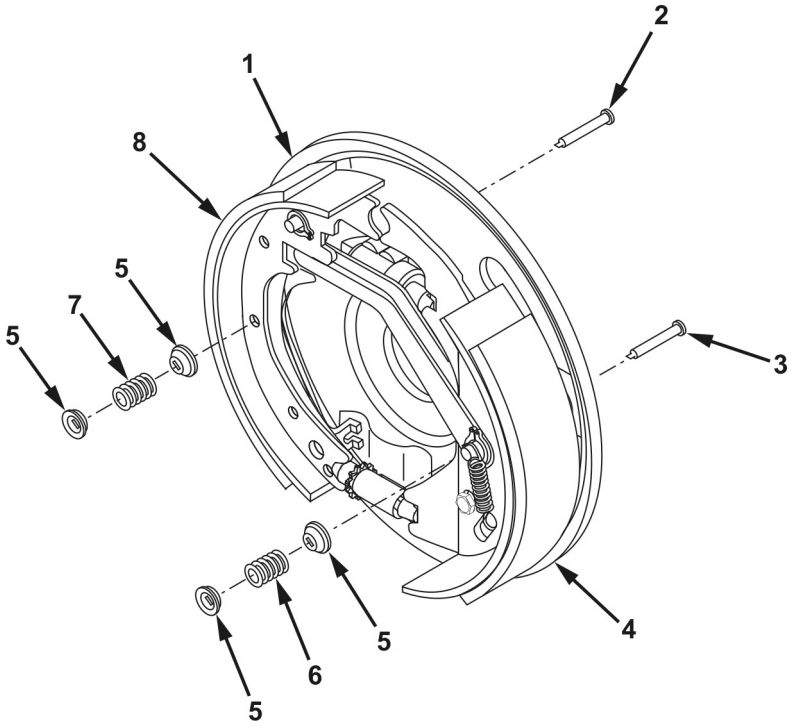

Figure 4. Brakeshoe Retainer Removal.

7. Remove spring (Figure 5, Item 4) and adjuster (Figure 5, Item 3) from rear brakeshoe (Figure 5, Item 1) and backing shoe lever (Figure 5, Item 2).

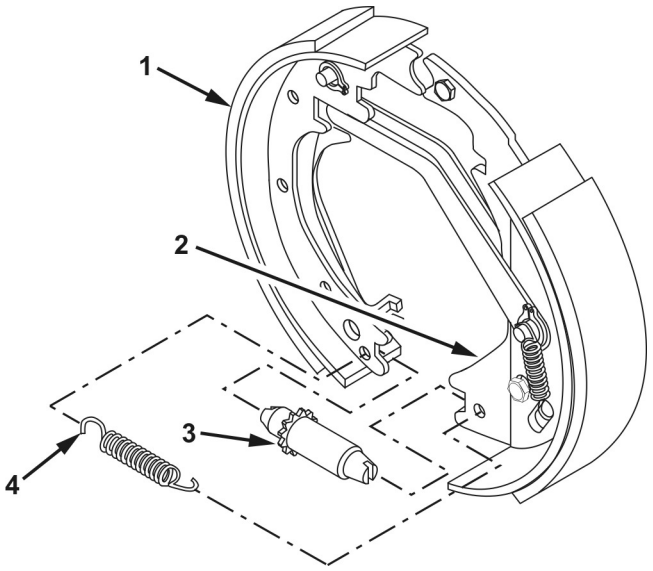

Figure 5. Brake Adjuster Removal.

SERVICE BRAKESHOE DISASSEMBLY - Continued

8. Remove spring tension clip (Figure 6, Item 6), spring washer (Figure 6, Item 7), and transporter washer (Figure 6, Item 8) securing parking brake link (Figure 6, Item 17) to rear brakeshoe (Figure 6, Item 18). Discard spring tension clip if damaged. Discard spring washer.

WARNING

If one brakeshoe is being replaced, replace all brakeshoes. Combination of old brakeshoes with new will cause uneven braking. Failure to comply may result in personnel death or injury, or equipment damage. Seek medical attention in event of injury.

9. Remove rear brakeshoe (Figure 6, Item 1) and transporter washer (Figure 6, Item 2) from parking brake link. Discard rear brakeshoe.
10. Remove spring (Figure 6, Item 11), retaining ring (Figure 6, Item 10), and pin (Figure 6, Item 9) securing backing shoe lever (Figure 6, Item 13) and parking shoe lever (Figure 6, Item 16) to front brakeshoe (Figure 6, Item 14). Discard retaining ring if damaged.
11. Remove locknut (Figure 6, Item 12) and capscrew (Figure 6, Item 15) securing backing shoe lever (Figure 6, Item 13) to front brakeshoe (Figure 6, Item 14). Discard locknut and front brakeshoe.
12. Remove locknut (Figure 6, Item 5) and capscrew (Figure 6, Item 3) securing travel link (Figure 6, Item 4) to backing shoe lever (Figure 6, Item 13). Remove travel link from backing shoe lever. Discard locknut.

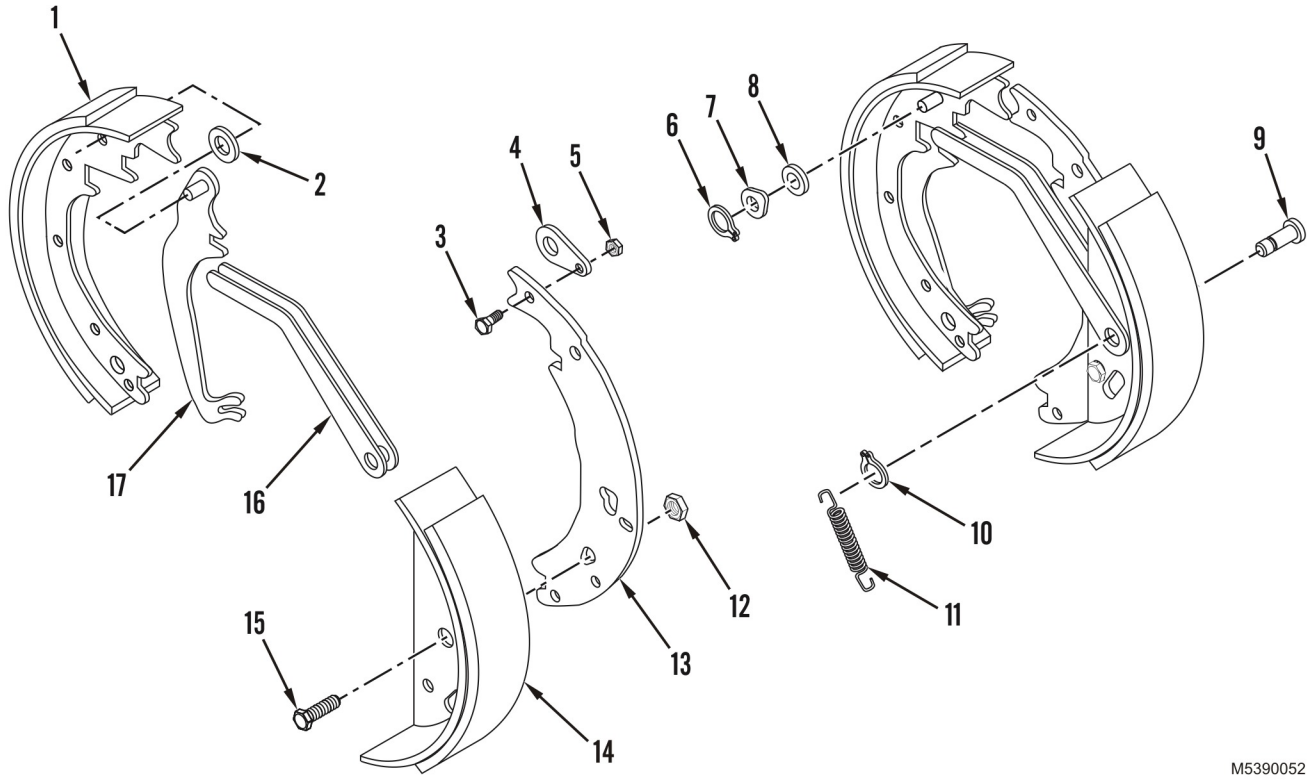

Figure 6. Service Brakeshoe Disassembly.

END OF TASK

SERVICE BRAKESHOE CLEANING AND INSPECTION

WARNING

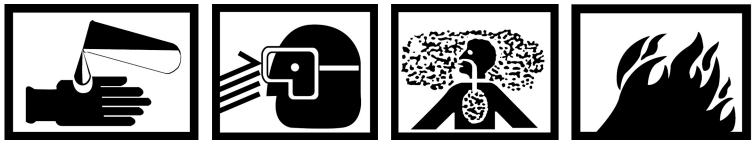

- **Solvent cleaning compound MIL-PRF-680 may be irritating to the eyes and skin. Wear protective gloves and goggles. First aid for skin contact: remove contaminated clothing. Wash skin thoroughly with soap and water. First aid for eye contact: flush with water for 15 minutes or until irritation subsides. If symptoms persist, seek medical attention. Failure to comply may result in personnel death or injury. Seek medical attention in event of injury.**
- **Use solvent cleaning compound MIL-PRF-680 in a well-ventilated area. Use respirator as needed. Accidental ingestion can cause irritation of digestive tract and respiratory tract. May cause lung and central nervous system damage. Can be fatal if swallowed. Inhalation of high/massive concentrations can cause coma or be fatal. First aid for ingestion: DO NOT induce vomiting. Seek immediate medical attention. First aid for inhalation: move to fresh air. If not breathing, provide artificial respiration. If symptoms persist, seek medical attention. Failure to comply may result in personnel death or injury. Seek medical attention in event of injury.**
- **MIL-PRF-680 solvent is combustible; DO NOT use or store near heat, sparks, flame, or other ignition sources. Use mechanical ventilation whenever product is used in a confined space, heated above ambient temperatures, or agitated. Keep container sealed when not in use. Failure to comply may result in personnel death or injury. Seek medical attention in event of injury.**
- **Improper cleaning methods and use of unauthorized cleaning liquids or solvents can injure personnel and damage equipment. Failure to comply may result in personnel death or injury. Seek medical attention in event of injury.**
- **Cloths or rags saturated with solvent cleaning compound must be disposed of in accordance with authorized facility procedures. Failure to comply may result in personnel death or injury. Seek medical attention in event of injury.**

1. Clean all removed components with cleaning solvent, and allow to dry.
2. Inspect backing plate for cracks, breaks, corrosion, or other damage. If damaged, replace backing plate by performing steps 3 through 5.

SERVICE BRAKESHOE CLEANING AND INSPECTION - Continued

3. Disconnect handbrake cable sheath (Figure 7, Item 3) from backing plate (Figure 7, Item 4).
4. Remove two capscrews (Figure 7, Item 2) with integral lockwashers securing wheel cylinder (Figure 7, Item 9) to backing plate (Figure 7, Item 1). Pull wheel cylinder loose from backing plate and disconnect flex brake line (Figure 7, Item 5) from wheel cylinder. Install temporary plug in end of flex line. Remove wheel cylinder.
5. Remove five nuts (Figure 7, Item 6) from mounting studs (Figure 7, Item 7) securing backing plate (Figure 7, Item 4) to axle spindle (Figure 7, Item 8). Remove backing plate (Figure 7, Item 1).

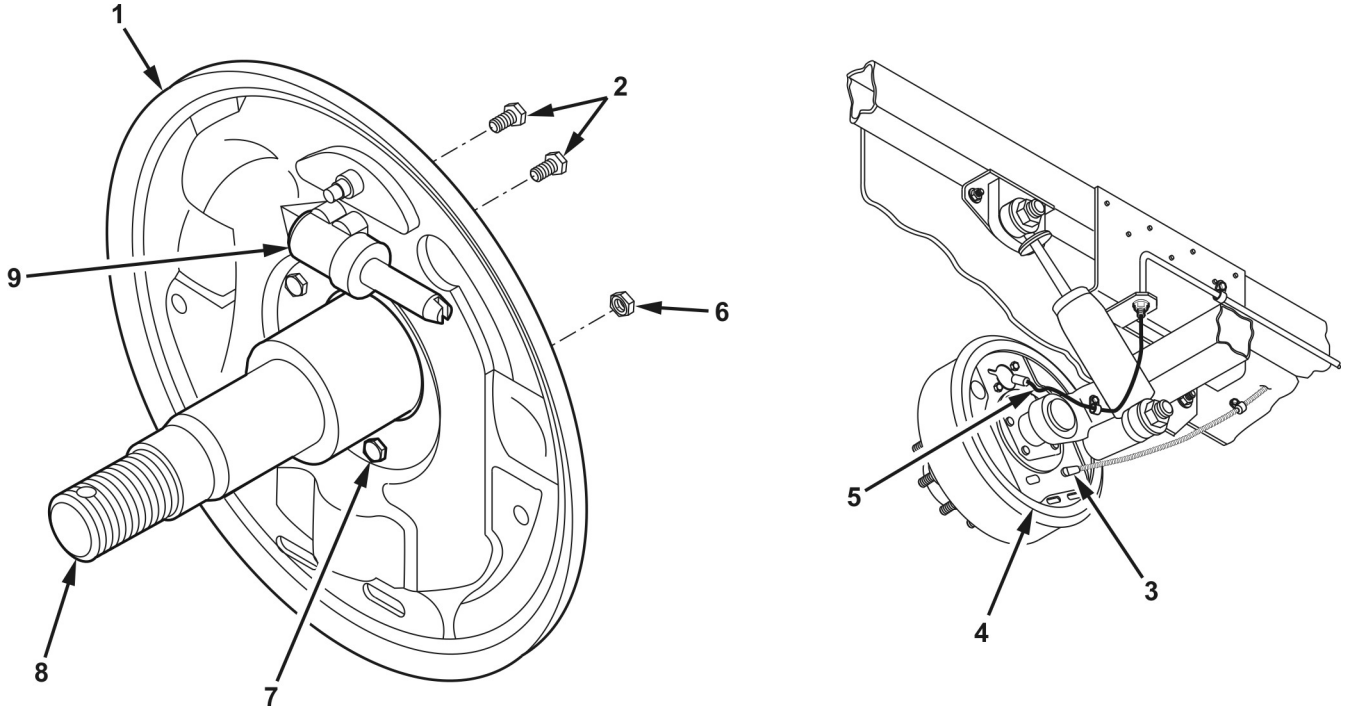

Figure 7. Backing Plate Removal.

END OF TASK

SERVICE BRAKESHOE ASSEMBLY

NOTE

Steps 1 through 4 are required only if backing plate was removed.

1. Install backing plate (Figure 8, Item 1) on axle spindle (Figure 8, Item 10), and secure with mounting studs (Figure 8, Item 9) and nuts (Figure 8, Item 8). Tighten nuts, and torque to 50 lb-ft (69 N•m).
2. Remove plug from flex brake line (Figure 8, Item 4), then connect flex brake line to wheel cylinder (Figure 8, Item 2).
3. Install wheel cylinder (Figure 8, Item 2) on backing plate (Figure 8, Item 1) with new capscrews (Figure 8, Item 3). Torque capscrews to 168 lb-in (19 N•m).
4. Feed handbrake cable (Figure 8, Item 6) through backing plate (Figure 8, Item 1), then connect cable sheath (Figure 8, Item 5) to backing plate.

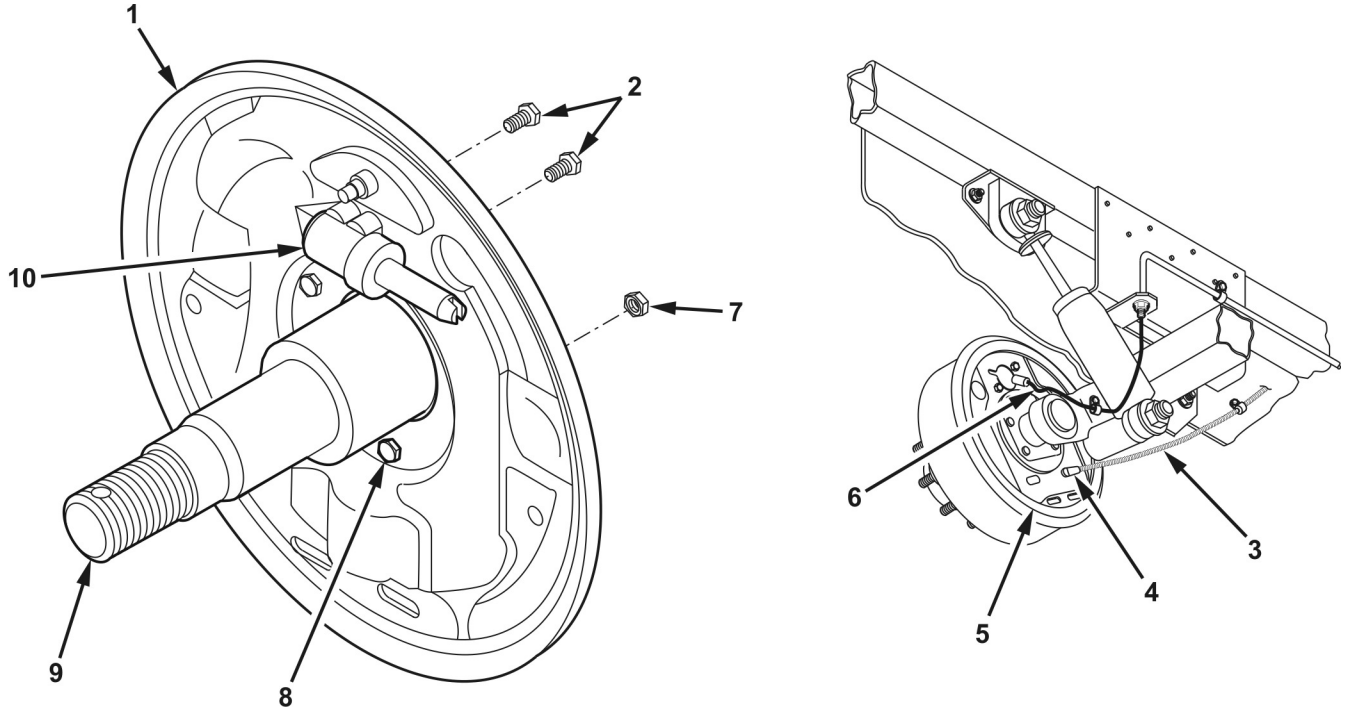

Figure 8. Backing Plate Installation.

SERVICE BRAKESHOE ASSEMBLY - Continued

5. Install travel link (Figure 9, Item 4) to backing shoe lever (Figure 9, Item 13) with capscrew (Figure 9, Item 3) and new locknut (Figure 9, Item 5). Measure clearance between backing shoe lever and travel link. Tighten locknut and capscrew to ensure 0.03 in. (0.79 mm) clearance.

WARNING

- **DO NOT allow grease to contact brakeshoe linings. Wipe excess lubricant from the brakeshoe linings to prevent grease soaking into the materials. Brakeshoe linings can absorb grease and oil, causing early glazing of linings and very poor braking action. If brakeshoe linings become soaked, notify Field Maintenance shop for replacement. Failure to follow this warning may cause brakes to malfunction. Failure to comply may result in personnel death or injury, or equipment damage. Seek medical attention in event of injury.**
- **If brakeshoe lining is replaced, replace all brakeshoe linings on axle. Combination of old brakeshoes with new brakeshoes will cause uneven braking. Failure to comply may result in personnel death or injury, or equipment damage. Seek medical attention in event of injury.**

6. Install capscrew (Figure 9, Item 15) and new locknut (Figure 9, Item 12) securing backing shoe lever (Figure 9, Item 13) to new front brakeshoe (Figure 9, Item 14). Tighten locknut and capscrew to ensure 0.03 in. (0.79 mm) clearance between backing shoe lever and front brakeshoe.
7. Install pin (Figure 9, Item 9) and retaining ring (Figure 9, Item 10) securing parking shoe lever (Figure 9, Item 16) to front brakeshoe (Figure 9, Item 14) and backing shoe lever (Figure 9, Item 13).
8. Install spring (Figure 9, Item 11) to front brakeshoe (Figure 9, Item 14) and pin (Figure 9, Item 9).
9. Install transporter washer (Figure 9, Item 2) to parking brake link (Figure 9, Item 17) and install parking brake link to new rear brakeshoe (Figure 9, Item 1). Install transporter washer (Figure 9, Item 8), a new spring washer (Figure 9, Item 7), and spring tension clip (Figure 9, Item 6) securing parking brake link to rear brakeshoe.

SERVICE BRAKESHOE ASSEMBLY - Continued

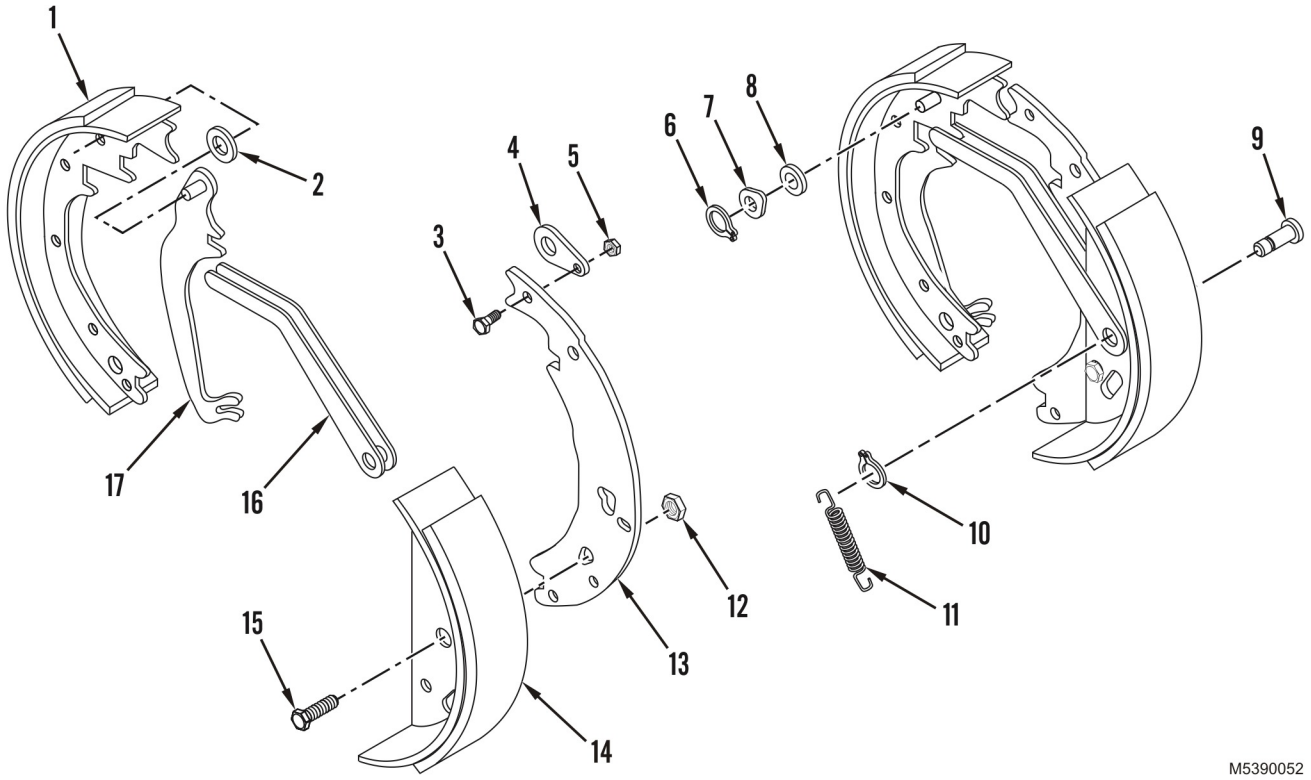

Figure 9. Service Brakeshoe Assembly.

10. Install spring (Figure 10, Item 4) and adjuster (Figure 10, Item 3) securing front brakeshoe assembly (Figure 10, Item 2) to rear brakeshoe assembly (Figure 10, Item 1).

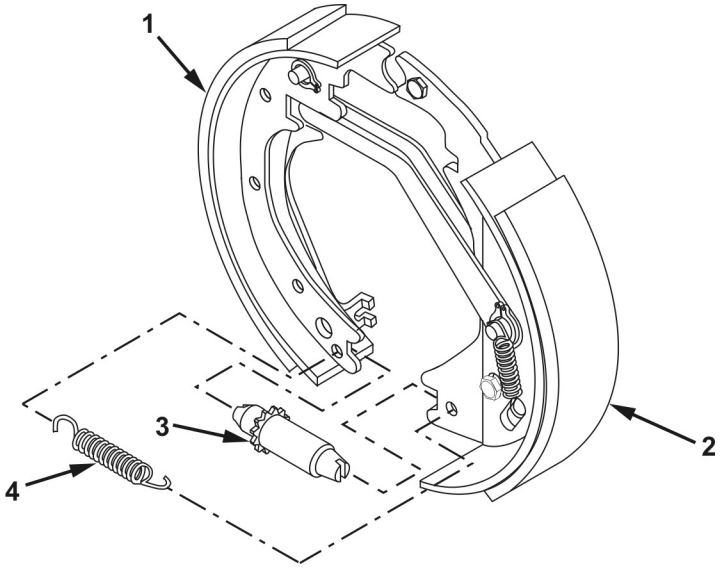

Figure 10. Brake Adjuster Installation.

SERVICE BRAKESHOE ASSEMBLY - Continued

11. Install pin (Figure 11, Item 7), retainers (Figure 11, Item 1), and spring (Figure 11, Item 2) securing rear brakeshoe (Figure 11, Item 3) to backing plate (Figure 11, Item 5).
12. Install pin (Figure 11, Item 10), retainers (Figure 11, Item 1), and spring (Figure 11, Item 12) securing front brakeshoe (Figure 11, Item 11) to backing plate (Figure 11, Item 5).
13. Install wheel cylinder rod (Figure 11, Item 6) into backing shoe lever (Figure 11, Item 8).
14. Install parking shoe lever (Figure 11, Item 9) into parking brake link (Figure 11, Item 4).

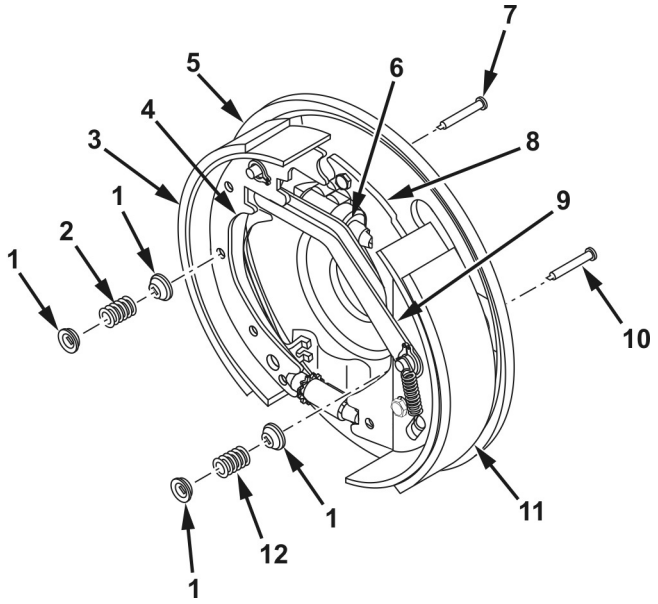

Figure 11. Brakeshoe Retainer Installation.

SERVICE BRAKESHOE ASSEMBLY - Continued

15. Install handbrake cable (Figure 12, Item 5) to parking brake link (Figure 12, Item 6).
16. Install washer (Figure 12, Item 9) to backing plate (Figure 12, Item 3) anchor pin (Figure 12, Item 2).
17. Install front shoe spring (Figure 12, Item 7) from front brakeshoe (Figure 12, Item 4) to anchor pin (Figure 12, Item 2).
18. Install rear shoe spring (Figure 12, Item 8) from rear brakeshoe (Figure 12, Item 1) to anchor pin (Figure 12, Item 2).

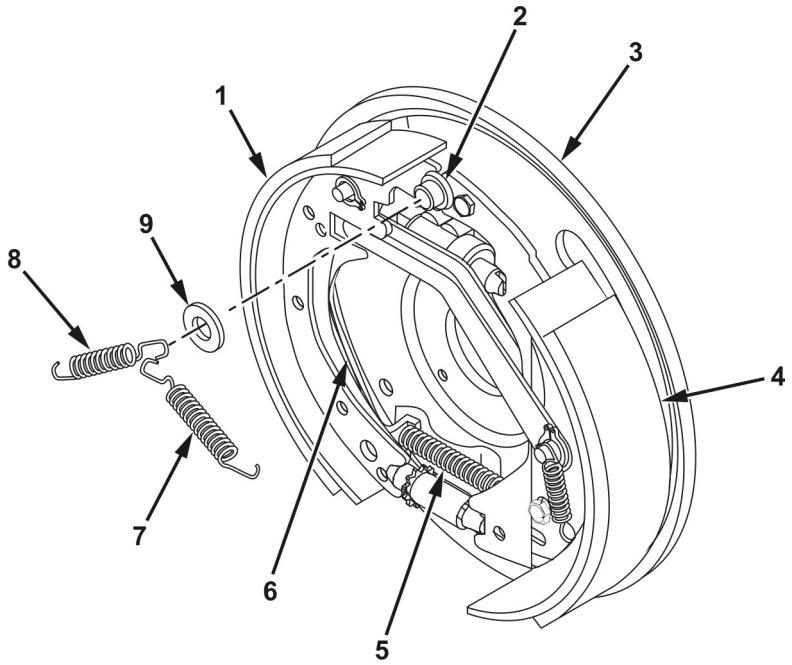

Figure 12. Front/Rear Shoe Spring Installation.

END OF TASK

FOLLOW-ON MAINTENANCE

1. Install hub/drum (WP 0046).
2. Install wheel and tire assembly (WP 0007) or (WP 0008).
3. Bleed brakes (WP 0041).
4. Adjust service brakes.

END OF TASK

SERVICE BRAKE ADJUSTMENT

WARNING

When performing maintenance on brake system, ensure that wheels are securely chocked. Failure to comply may cause trailer to roll, resulting in personnel death or injury, or equipment damage. Seek medical attention in event of injury.

1. Apply handbrakes. Chock wheel and tire assembly opposite side being adjusted (WP 0005).

WARNING

Ensure jack is positioned directly under the torsion arm, next to the wheel being worked on. DO NOT place jack at any other location such as frame rails. Failure to comply may result in personnel death or injury, or equipment damage. Seek medical attention in event of injury.

2. Remove wingscrew (Figure 13, Item 6), lockwasher (Figure 13, Item 5), rectangular washer (Figure 13, Item 4), and jack spacer (Figure 13, Item 3) from trailer frame (Figure 13, Item 2).
3. Position jack spacer (Figure 13, Item 3) and jack (Figure 13, Item 9) under lower shock absorber mount (Figure 13, Item 7).
4. Using jack (Figure 13, Item 9) under torsion arm (Figure 13, Item 7), raise wheel off ground.
5. Install jack stands (Figure 13, Item 1) under sling frame (Figure 13, Item 10) on both front and rear of side being worked on, and lower trailer onto jack stands.
6. Release handbrake on side being adjusted.

SERVICE BRAKE ADJUSTMENT - Continued

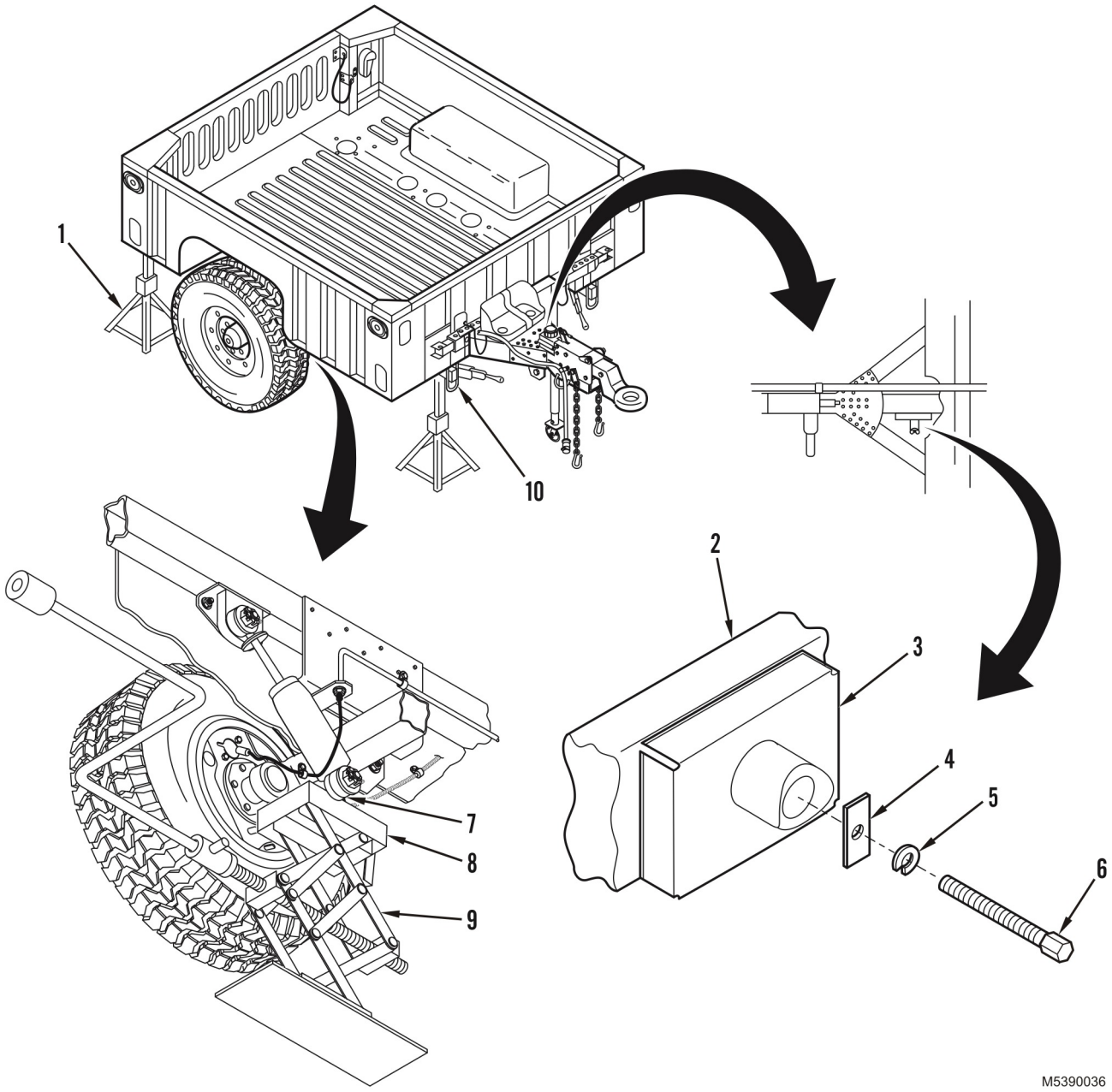

Figure 13. Service Brake Adjustment.

SERVICE BRAKE ADJUSTMENT - Continued

NOTE

Both service brakes are adjusted in the same manner.

7. Remove protective plug (Figure 14, Item 2) in backing plate (Figure 14, Item 1) adjusting slot (Figure 14, Item 5).
8. Rotate star wheel (Figure 14, Item 3) upward, 20 to 25 clicks, to tighten brakes.

NOTE

- The brake adjustment is performed by rotating the wheel using a torque wrench and measuring the force required to turn the wheel. While checking the adjustment, the wheel must be turned in the forward direction to ensure correct adjustment. To rotate the wheel in the forward direction, place your hand on the side of the wheel towards the taillight, and roll the wheel with your hand going over the top towards the tongue.
- The torque wrench must be properly aligned on the wheel to ensure accurate measurement of force. Proper placement for the torque wrench is with the handle pointing away from the center of the wheel and in a straight line with the center of the grease cap.
- If the wheel rotates in the reverse or backwards direction, the brakeshoes must be aligned by starting the procedure again at step 9.

9. Rotate the wheel three or four revolutions in the forward direction, and stop the wheel where two opposing lug nuts are directly above and below the center of the grease cap.
10. Set torque wrench (Figure 14, Item 4) to 170 lb-in (19 N•m) and place on the top lug nut, and turn the wheel 90 degrees, 1/4 rotation, in the forward direction, checking whether the torque wrench exceeded the setting.
11. Move the torque wrench (Figure 14, Item 4) back to the top, checking every other lug nut, and repeat step 10. Continue checking torque until four lug nuts have been checked, one full rotation of the wheel.
12. Reset the torque wrench (Figure 14, Item 4) to 220 lb-in (24 N•m), and repeat steps 10 and 11. If the torque measurement at two or more lugs is less than 170 lb-in (19 N•m) tighten the brakes and repeat steps 10 through 12. If the torque measurement at two or more lugs is greater than 220 lb-in (24 N•m) loosen the brakes and repeat steps 10 through 12.
13. Ensure that the torque measurements at the four lugs meet one of the following:

Table 1. Torque Measurements.

CONDITION	NUMBER OF LUGS LESS THAN 170 LB-IN	NUMBER OF LUGS GREATER THAN 170 LB-IN AND LESS THAN 220 LB-IN	NUMBER OF LUGS GREATER THAN 220 LB-IN
1	1	3	0
2	0	3	1
3	1	2	1

14. Loosen brakes by rotating star wheel (Figure 14, Item 3) in the opposite direction 25 clicks.

SERVICE BRAKE ADJUSTMENT - Continued

15. Install protective plug (Figure 14, Item 2) in backing plate (Figure 14, Item 1) adjusting slot (Figure 14, Item 5).

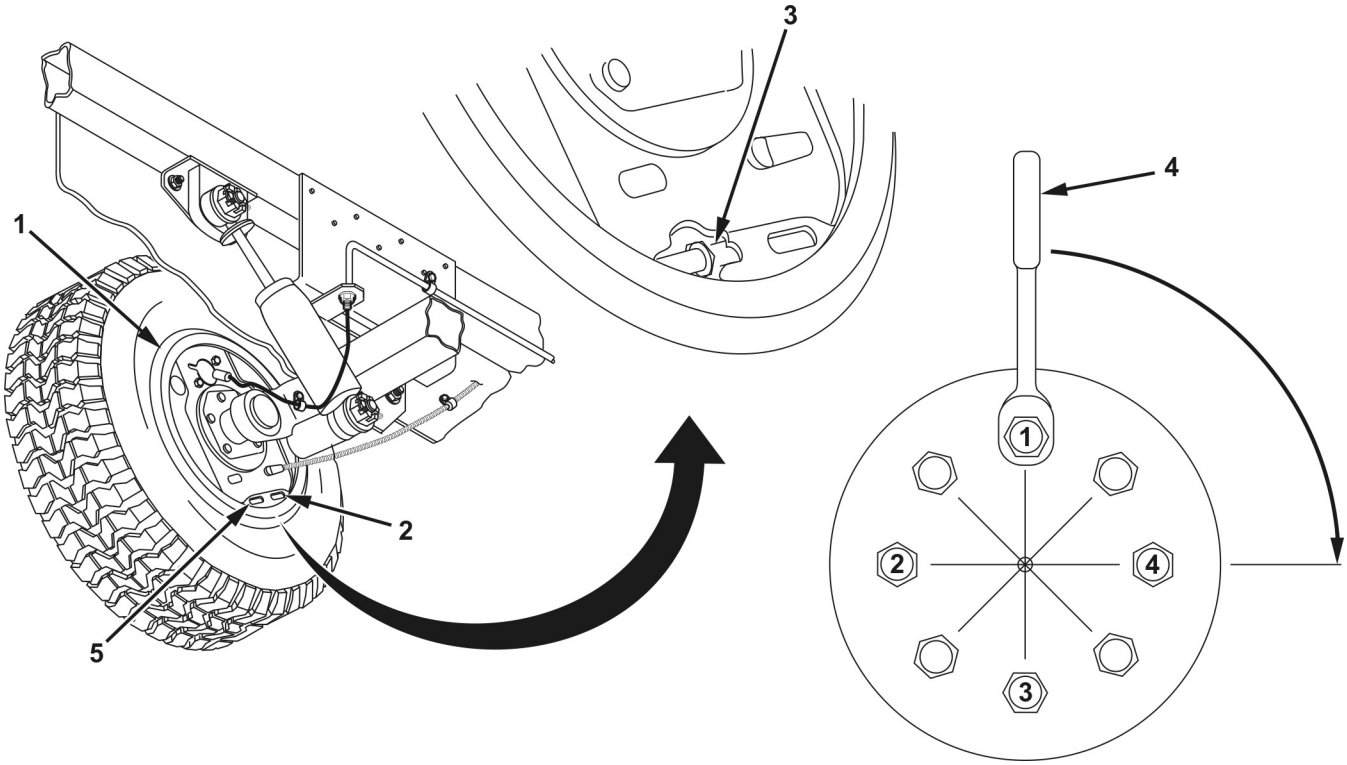

Figure 14. Service Brake Adjustment.

SERVICE BRAKE ADJUSTMENT - Continued

16. Using jack (Figure 15, Item 7) and jack spacer (Figure 15, Item 3), raise trailer and remove two jack stands (Figure 15, Item 1).
17. Using jack (Figure 15, Item 7) and jack spacer (Figure 15, Item 3), lower trailer. Apply handbrake on adjusted side.
18. Repeat steps 1 through 15 for other side.
19. Position jack spacer (Figure 15, Item 8) on trailer frame (Figure 15, Item 2), and secure with rectangular washer (Figure 15, Item 4), lockwasher (Figure 15, Item 5), and wingscrew (Figure 15, Item 6).
20. Connect trailer to towing vehicle.
21. Engage service brake breakaway lever.

WARNING

Personnel must stand clear of towing vehicle and trailer during the following brake check. Failure to comply may result in personnel death or injury. Seek medical attention in event of injury.

22. Attempt to move the trailer with the towing vehicle. Towing vehicle should be in drive, transfer case in high range, and engine at idle speed. If service brakes do not hold trailer, perform brake system troubleshooting (WP 0018).
23. Reset service brake breakaway lever to disengaged position.
24. Disconnect trailer from towing vehicle.

SERVICE BRAKE ADJUSTMENT - Continued

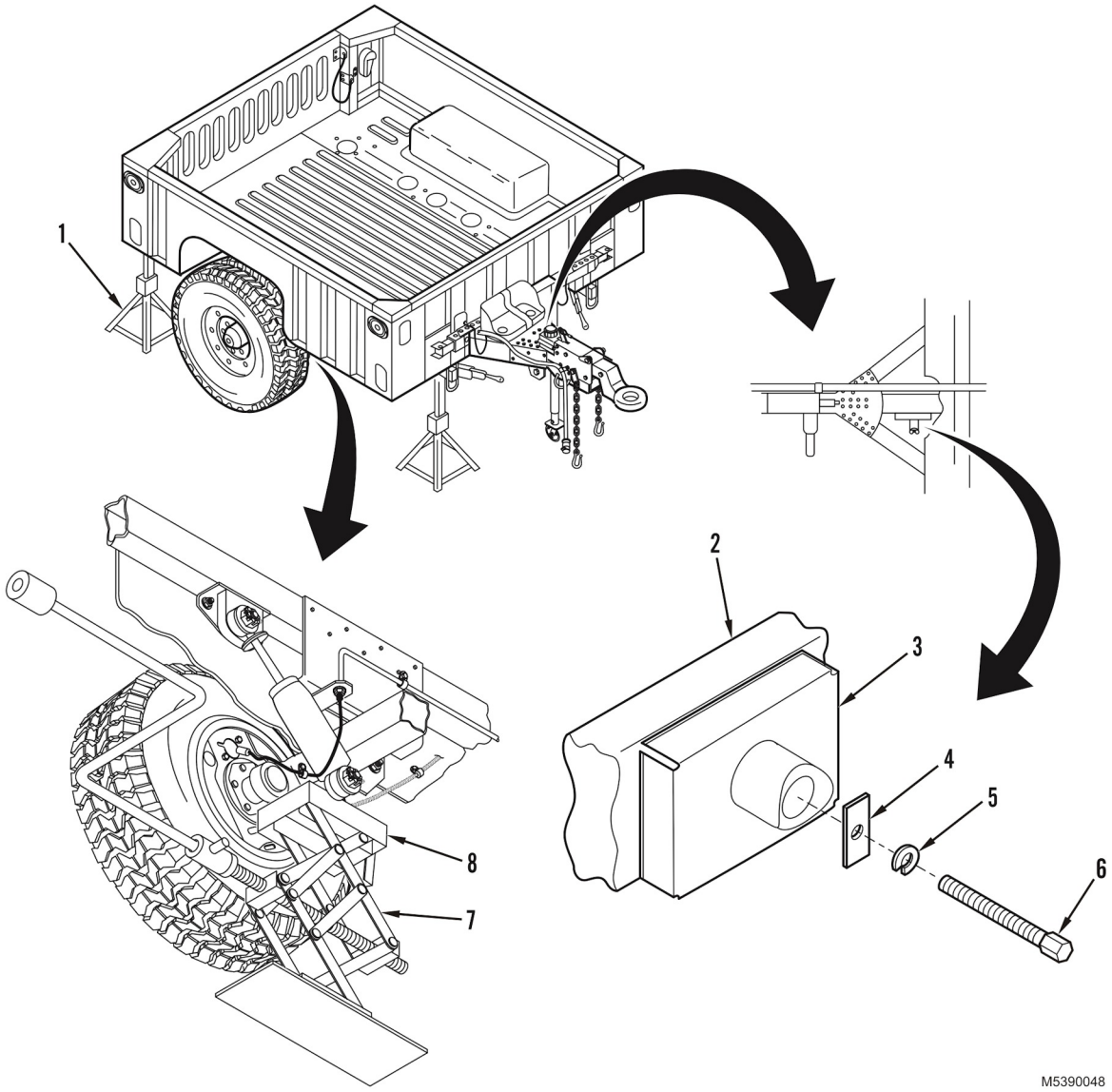

Figure 15. Jack Placement.

END OF TASK

FOLLOW-ON MAINTENANCE

Adjust handbrakes (WP 0005).

END OF TASK

END OF WORK PACKAGE

FIELD MAINTENANCE
WHEEL CYLINDER REPLACEMENT

INITIAL SETUP:

Tools and Special Tools
Tool Kit, General Mechanic's (WP 0096, Table 1, Item 1)
Wrench, Torque: 3/8-in. drive, 0-300 lb-in. (WP 0096, Table 1, Item 15)

Materials/Parts
Cleaning Solvent, Type II (WP 0095, Table 1, Item 6)
Rag, Wiping (WP 0095, Table 1, Item 28)

References
WP 0041

Equipment Condition
Wheels removed (Old Jack) (WP 0007)
Wheels removed (New Jack) (WP 0008)
Hub/drum removed (WP 0046)
Brakeshoes removed (WP 0038)

WARNING

Accidental or intentional introduction of liquid contaminants into the environment is a violation of state, federal, and military regulations. Refer to Army Petroleum, Oils, and Lubricants (POL) for information concerning storage, use, and disposal of these liquids. Failure to comply may cause damage to environment and health of personnel. Seek medical attention in the event of an injury.

NOTE

Use a drain pan to capture any draining or leaking fluid. Refer to local procedures and plans for preventing and responding to fluid spills or leaks. Comply with local regulations when disposing of clean-up material and leaked and spilled fluids.

REMOVAL

1. Disconnect flex brake line (Figure 1, Item 2) from wheel cylinder (Figure 1, Item 1).
2. Install temporary plug in flex brake line (Figure 1, Item 2).
3. Remove two capscrews (Figure 1, Item 3) with integral lockwashers securing wheel cylinder (Figure 1, Item 1) to backing plate (Figure 1, Item 4).
4. Pull wheel cylinder (Figure 1, Item 1) loose from backing plate (Figure 1, Item 4).

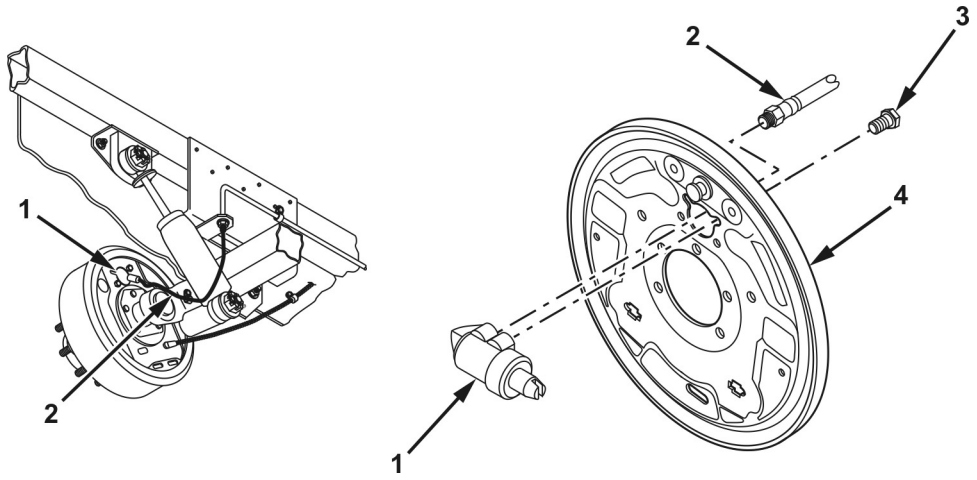

Figure 1. Wheel Cylinder Removal.

END OF TASK

CLEANING AND INSPECTION

WARNING

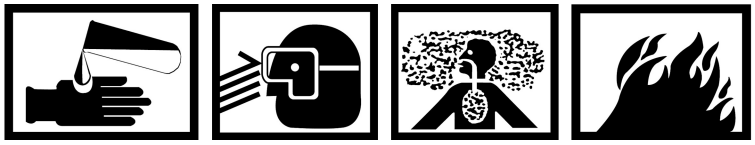

- **Solvent cleaning compound MIL-PRF-680 may be irritating to the eyes and skin. Wear protective gloves and goggles. First aid for skin contact: remove contaminated clothing. Wash skin thoroughly with soap and water. First aid for eye contact: flush with water for 15 minutes or until irritation subsides. If symptoms persist, seek medical attention. Failure to comply may result in personnel death or injury. Seek medical attention in event of injury.**
- **Use solvent cleaning compound MIL-PRF-680 in a well-ventilated area. Use respirator as needed. Accidental ingestion can cause irritation of digestive tract and respiratory tract. May cause lung and central nervous system damage. Can be fatal if swallowed. Inhalation of high/massive concentrations can cause coma or be fatal. First aid for ingestion: DO NOT induce vomiting. Seek immediate medical attention. First aid for inhalation: move to fresh air. If not breathing, provide artificial respiration. If symptoms persist, seek medical attention. Failure to comply may result in personnel death or injury. Seek medical attention in event of injury.**
- **MIL-PRF-680 solvent is combustible; DO NOT use or store near heat, sparks, flame, or other ignition sources. Use mechanical ventilation whenever product is used in a confined space, heated above ambient temperatures, or agitated. Keep container sealed when not in use. Failure to comply may result in personnel death or injury. Seek medical attention in event of injury.**
- **Improper cleaning methods and use of unauthorized cleaning liquids or solvents can injure personnel and damage equipment. Failure to comply may result in personnel death or injury. Seek medical attention in event of injury.**
- **Cloths or rags saturated with solvent cleaning compound must be disposed of in accordance with authorized facility procedures. Failure to comply may result in personnel death or injury. Seek medical attention in event of injury.**

1. Clean all removed components except wheel cylinder with cleaning solvent, and allow to dry.
2. Inspect components for cracks, breaks, corrosion, or damaged threads. Replace if damaged.

END OF TASK

INSTALLATION

NOTE

For ease of installation, install the rear capscrew first.

1. Install wheel cylinder (Figure 2, Item 1) and secure with two capscrews (Figure 2, Item 3). Torque capscrews to 168 lb-in (19 N•m).
2. Install wheel cylinder (Figure 2, Item 1) on backing plate (Figure 2, Item 4). Secure with two capscrews (Figure 2, Item 3).
3. Remove temporary plug from flex brake line (Figure 2, Item 2).
4. Connect flex brake line (Figure 2, Item 2) to wheel cylinder (Figure 2, Item 1).

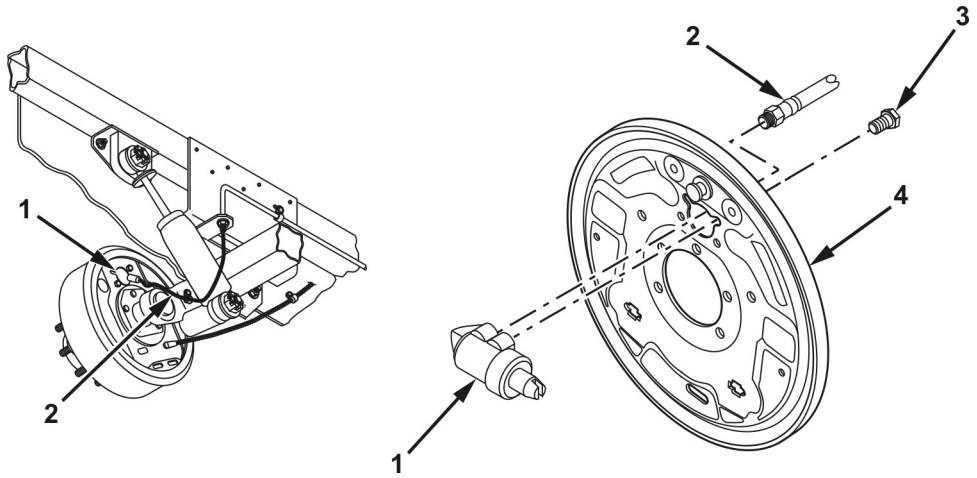

Figure 2. Wheel Cylinder Installation.

END OF TASK

FOLLOW-ON MAINTENANCE

1. Install brakeshoe (WP 0038).
2. Install hub/drum (WP 0046).
3. Install wheel and tire assembly (WP 0007) or (WP 0008).
4. Bleed hydraulic system (WP 0041).
5. Adjust service brakes (WP 0038).

END OF TASK

END OF WORK PACKAGE

FIELD MAINTENANCE
BREAKAWAY LEVER AND LEAF SPRING REPLACEMENT

INITIAL SETUP:

Tools and Special Tools
Tool Kit, General Mechanic's (WP 0096, Table 1, Item 1)
Wrench, Torque: 3/8-in. drive, 5-75 lb-ft (WP 0096, Table 1, Item 16)

Materials/Parts
Strap, Tiedown, Electrical (WP 0095, Table 1, Item 29)

Equipment Condition
Handbrake applied
Wheels chocked (WP 0005)

REMOVAL

1. Remove four capscrews (Figure 1, Item 5) from hydraulic actuator assembly (Figure 1, Item 6).
2. Pry master cylinder assembly (Figure 1, Item 3) 0.50 in. (12.7 mm) from hydraulic actuator assembly (Figure 1, Item 6), providing access to breakaway lever (Figure 1, Item 2) and leaf spring (Figure 1, Item 4).
3. Remove hydraulic actuator breakaway lever (Figure 1, Item 2) and leaf spring (Figure 1, Item 4) from hydraulic actuator assembly (Figure 1, Item 6).
4. If damaged, remove electrical tiedown strap (Figure 1, Item 1) from cable (Figure 1, Item 7).

END OF TASK

INSTALLATION

1. Install hydraulic actuator breakaway lever (Figure 1, Item 2) and leaf spring (Figure 1, Item 4) into hydraulic actuator assembly (Figure 1, Item 6).
2. Install four capscrews (Figure 1, Item 5) securing master cylinder assembly (Figure 1, Item 3) in hydraulic actuator assembly (Figure 1, Item 6). Torque capscrews (Figure 1, Item 5) to 30 lb-ft (41 N•m).
3. If removed, install new electrical tiedown strap (Figure 1, Item 1) on cable (Figure 1, Item 7).

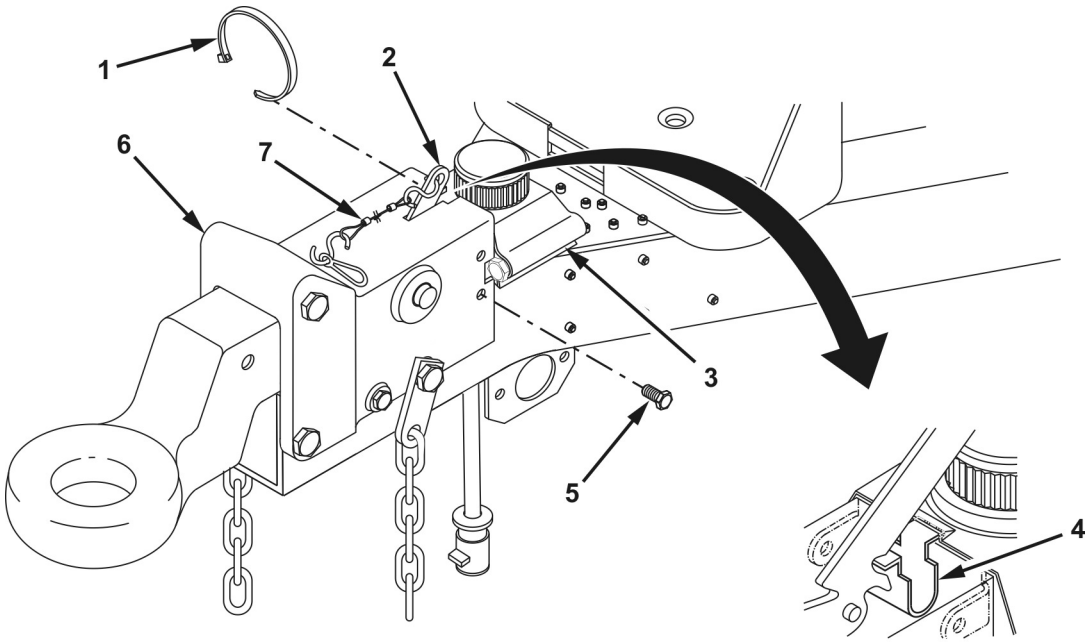

Figure 1. Breakaway Lever and Leaf Spring Removal and Installation.

END OF TASK

END OF WORK PACKAGE

FIELD MAINTENANCE
HYDRAULIC BRAKE SYSTEM BLEEDING

INITIAL SETUP:

Tools and Special Tools
Tool Kit, General Mechanic's (WP 0096, Table 1, Item 1)
Filler and Bleeder Kit (WP 0096, Table 1, Item 8)

Materials/Parts
Brake Fluid, Automotive (WP 0095, Table 1, Item 2)
Rag, Wiping (WP 0095, Table 1, Item 28)

Equipment Condition
Handbrake released
Wheels chocked (WP 0005)

WARNING

When performing maintenance on brake system, ensure that wheels are securely chocked. Failure to comply may cause trailer to roll, resulting in personnel death or injury, or equipment damage. Seek medical attention in event of injury.

WARNING

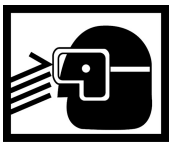

Eye injury may result if brake fluid comes in contact with eyes. Always wear eye protection when working with brake fluid. Failure to comply may result in personnel injury. Seek medical attention in event of injury.

WARNING

Accidental or intentional introduction of liquid contaminants into the environment is a violation of state, federal, and military regulations. Refer to Army Petroleum, Oils, and Lubricants (POL) for information concerning storage, use, and disposal of these liquids. Failure to comply may cause damage to environment and health of personnel. Seek medical attention in the event of an injury.

BLEEDING

CAUTION

Dirt, water, or grease will contaminate brake fluid, causing brake system damage. Clean exterior of master cylinder and master cylinder cap before removing cover. Failure to comply may result in equipment damage.

NOTE

- Use a drain pan to capture any draining or leaking fluid. Refer to local procedures and plans for preventing and responding to fluid spills or leaks. Comply with local regulations when disposing of clean-up material and leaked and spilled fluids.
- Bleeding of both wheel cylinders is performed in the same manner. Ensure both wheel cylinders are bled.

1. Remove cap (Figure 1, Item 1) from master cylinder (Figure 1, Item 10).
2. Fill master cylinder (Figure 1, Item 10) to 0.125 in. (3.18 mm) from bottom of reservoir neck with brake fluid.
3. Install hose (Figure 1, Item 3) from vacuum side of tool (Figure 1, Item 4) to wheel cylinder bleeder fitting (Figure 1, Item 2).
4. Install hose (Figure 1, Item 5) from injection side of tool (Figure 1, Item 4) to empty container (Figure 1, Item 6).
5. Pull breakaway cable (Figure 1, Item 9) until breakaway lever (Figure 1, Item 8) is in locked position secured by leaf spring (Figure 1, Item 7).
6. Carefully open wheel cylinder bleeder fitting (Figure 1, Item 2) 1/2 to 3/4 turn, and drain brake fluid into container (Figure 1, Item 6) until brake fluid is free of air bubbles.
7. Close wheel cylinder bleeder fitting (Figure 1, Item 2).

CAUTION

At times rubber diaphragm may be distorted. Ensure that rubber diaphragm is completely compressed within master cylinder cap before installing cap on master cylinder. Failure to comply may result in damage to equipment damage.

8. Install cap (Figure 1, Item 1) on master cylinder (Figure 1, Item 10).
9. Disengage breakaway lever (Figure 1, Item 8) from leaf spring (Figure 1, Item 7).
10. Remove hose (Figure 1, Item 3) from wheel cylinder bleeder fitting (Figure 1, Item 2).

BLEEDING - Continued

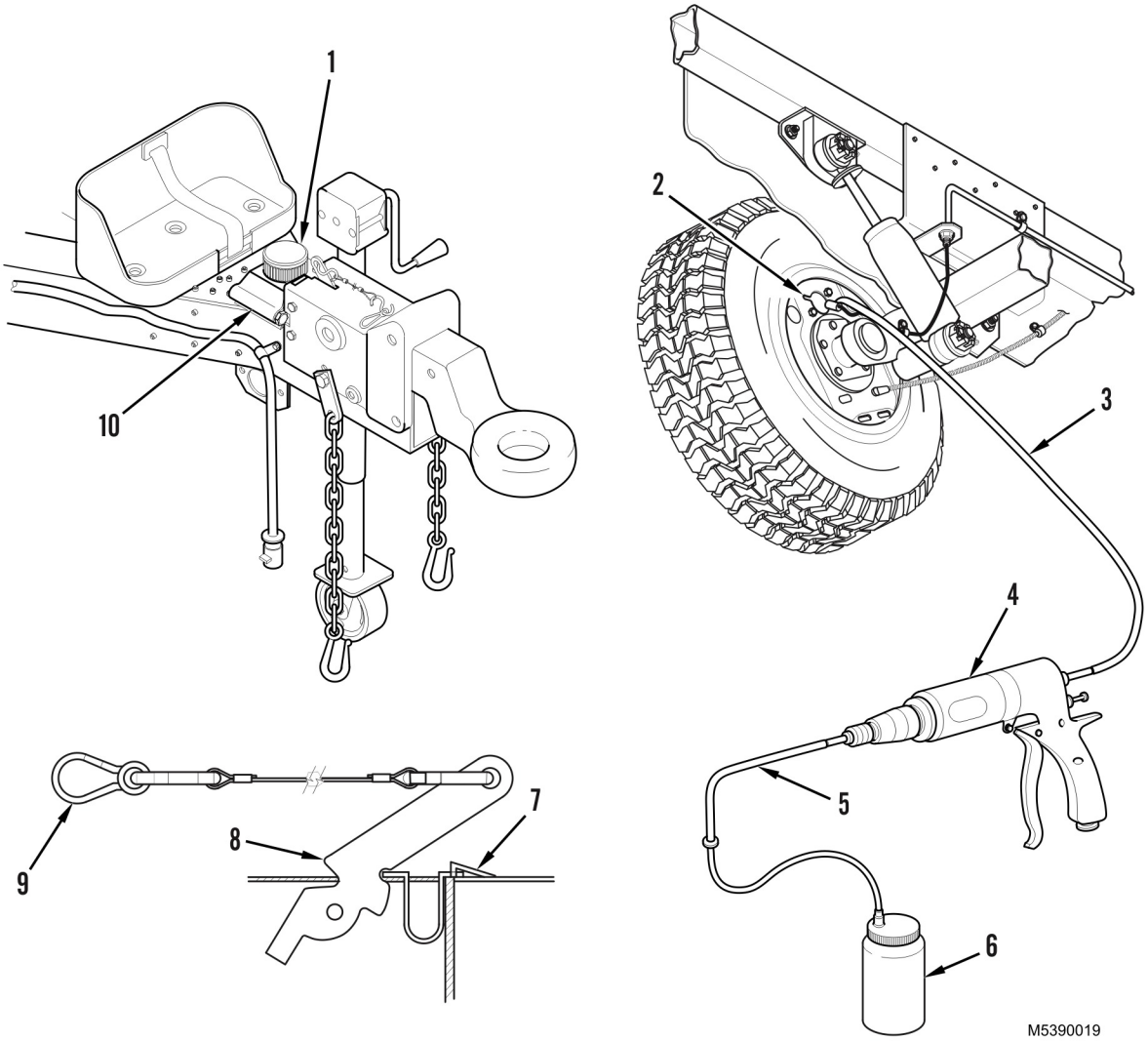

Figure 1. Hydraulic Brake System Bleeding.

END OF TASK

FOLLOW-ON MAINTENANCE

Apply handbrakes.

END OF TASK

END OF WORK PACKAGE

FIELD MAINTENANCE
HYDRAULIC BRAKE ACTUATOR REPLACEMENT

INITIAL SETUP:

Tools and Special Tools
- Tool Kit, General Mechanic's (WP 0096, Table 1, Item 1)
- Wrench, Torque: 1/2-in. drive, 30-250 lb-ft (WP 0096, Table 1, Item 14)
- Wrench, Torque: 3/8-in. drive, 5-75 lb-ft (WP 0096, Table 1, Item 16)

Materials/Parts
- Brush, Wire (WP 0095, Table 1, Item 5)
- Cleaning Solvent, Type II (WP 0095, Table 1, Item 6)
- Rag, Wiping (WP 0095, Table 1, Item 28)
- Cotter Pin Qty: 2 (WP 0076, Figure 8, Item 22)
- Locknut Qty: 1 (WP 0076, Figure 8, Item 16)

Materials/Parts (cont.)
- Locknut Qty: 2 (WP 0076, Figure 8, Item 39)
- Machine Screw Qty: 4 (WP 0076, Figure 8, Item 14)

References
- WP 0041

Equipment Condition
- Handbrake applied
- Wheels chocked (WP 0005)
- Safety chains removed (WP 0048)
- Intervehicular cable disconnected from towing vehicle (WP 0005)

WARNING

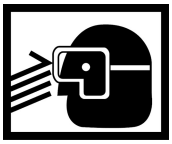

Eye injury may result if brake fluid comes in contact with eyes. Always wear eye protection when working with brake fluid. Failure to comply may result in personnel injury. Seek medical attention in event of injury.

WARNING

Accidental or intentional introduction of liquid contaminants into the environment is a violation of state, federal, and military regulations. Refer to Army Petroleum, Oils, and Lubricants (POL) for information concerning storage, use, and disposal of these liquids. Failure to comply may cause damage to environment and health of personnel. Seek medical attention in the event of an injury.

REMOVAL

NOTE

- Use a drain pan to capture any draining or leaking fluid. Refer to local procedures and plans for preventing and responding to fluid spills or leaks. Comply with local regulations when disposing of clean-up material and leaked and spilled fluids.
- Master cylinder adapter (Figure 1, Item 4) requires a 12 mm wrench.

1. Disconnect flex brake line (Figure 1, Item 2) from master cylinder adapter (Figure 1, Item 4) and install temporary plug in flex brake line fitting end.
2. Remove cap (Figure 1, Item 1) from master cylinder (Figure 1, Item 9).
3. Remove cover (Figure 1, Item 3) from master cylinder (Figure 1, Item 9). Then reinstall cap (Figure 1, Item 1) on master cylinder.
4. Remove two locknuts (Figure 1, Item 7), two washers (Figure 1, Item 6), and two capscrews (Figure 1, Item 5) securing hydraulic actuator assembly (Figure 1, Item 8) to trailer. Discard locknuts.
5. Remove hydraulic actuator assembly (Figure 1, Item 8) from trailer.

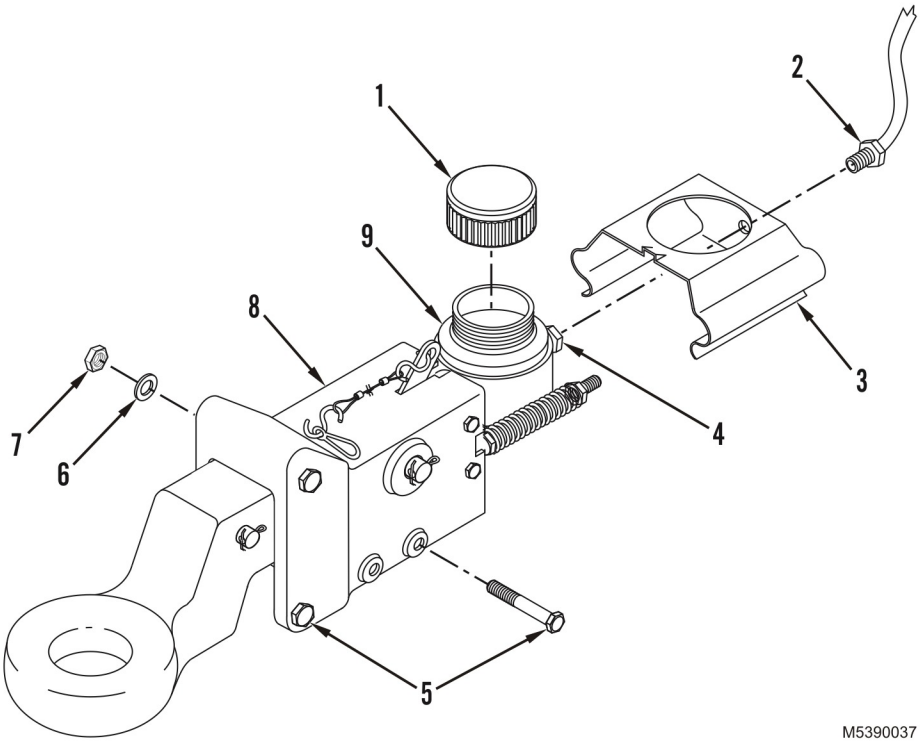

Figure 1. Hydraulic Brake Actuator Removal.

END OF TASK

DISASSEMBLY

1. Remove cotter pin (Figure 2, Item 2) from master pin (Figure 2, Item 1). Remove master pin and washer (Figure 2, Item 5). Discard cotter pin.
2. Remove lunette (Figure 2, Item 10), with damper pin (Figure 2, Item 8) and two rollers (Figure 2, Item 6) attached, from brake actuator (Figure 2, Item 3) and master cylinder (Figure 2, Item 4).
3. Remove cotter pin (Figure 2, Item 9) and damper pin (Figure 2, Item 8) securing damper (Figure 2, Item 7) to lunette (Figure 2, Item 10). Discard cotter pin.

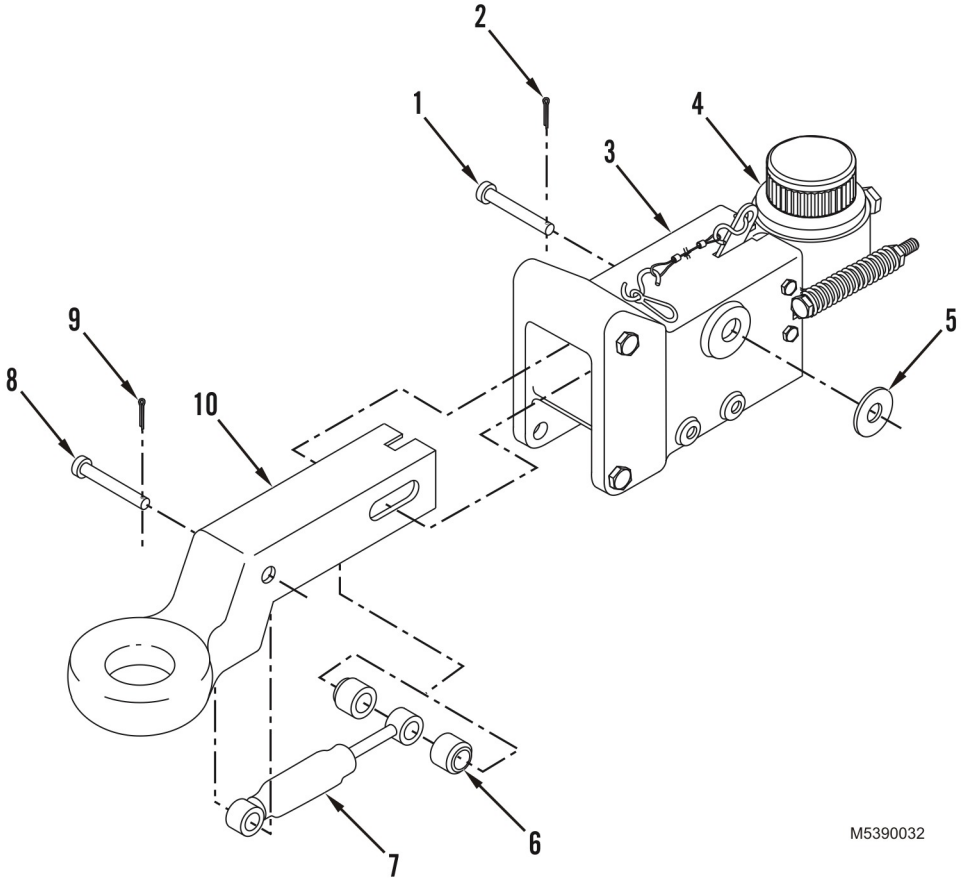

Figure 2. Hydraulic Brake Actuator Disassembly.

DISASSEMBLY - Continued

4. Remove four machine screws (Figure 3, Item 10) securing master cylinder mounting plate (Figure 3, Item 4) to brake actuator housing (Figure 3, Item 14). Remove master cylinder (Figure 3, Item 5) with attached mounting plate from actuator housing. Discard machine screws.
5. Remove hydraulic actuator breakaway spring lever (Figure 3, Item 2) and attached breakaway cable (Figure 3, Item 1) from actuator housing (Figure 3, Item 14). Then remove breakaway lever spring (Figure 3, Item 3).
6. Remove two capscrews (Figure 3, Item 9), nuts (Figure 3, Item 6), washers (Figure 3, Item 7), and springs (Figure 3, Item 8) securing master cylinder mounting plate (Figure 3, Item 4) and push rod assembly (Figure 3, Item 15) to master cylinder (Figure 3, Item 5). Carefully remove push rod assembly and mounting plate from master cylinder.
7. Carefully remove push rod assembly (Figure 3, Item 15) and mounting plate (Figure 3, Item 4) from master cylinder.
8. Remove locknut (Figure 3, Item 13), upper bolt (Figure 3, Item 11), and roller (Figure 3, Item 12) from actuator housing (Figure 3, Item 14). Discard locknut.

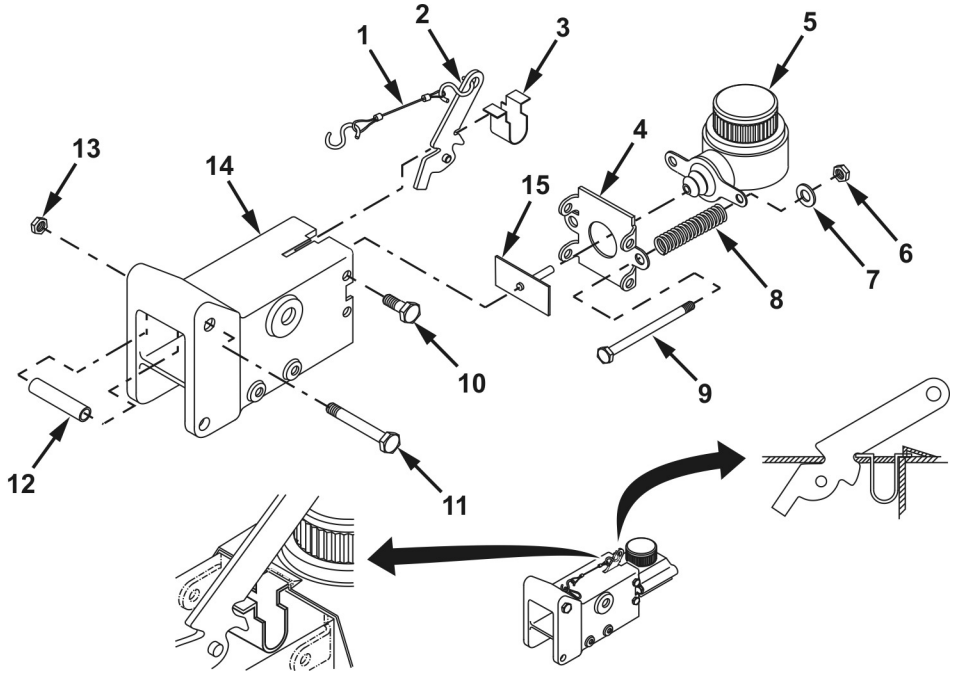

Figure 3. Hydraulic Brake Actuator Disassembly.

END OF TASK

CLEANING AND INSPECTION

WARNING

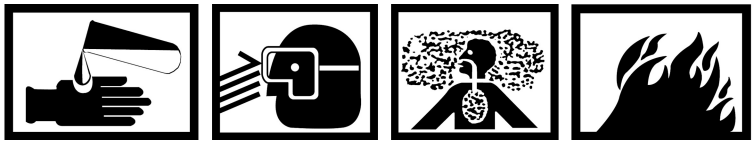

- **Solvent cleaning compound MIL-PRF-680 may be irritating to the eyes and skin. Wear protective gloves and goggles. First aid for skin contact: remove contaminated clothing. Wash skin thoroughly with soap and water. First aid for eye contact: flush with water for 15 minutes or until irritation subsides. If symptoms persist, seek medical attention. Failure to comply may result in personnel death or injury. Seek medical attention in event of injury.**
- **Use solvent cleaning compound MIL-PRF-680 in a well-ventilated area. Use respirator as needed. Accidental ingestion can cause irritation of digestive tract and respiratory tract. May cause lung and central nervous system damage. Can be fatal if swallowed. Inhalation of high/massive concentrations can cause coma or be fatal. First aid for ingestion: DO NOT induce vomiting. Seek immediate medical attention. First aid for inhalation: move to fresh air. If not breathing, provide artificial respiration. If symptoms persist, seek medical attention. Failure to comply may result in personnel death or injury. Seek medical attention in event of injury.**
- **MIL-PRF-680 solvent is combustible; DO NOT use or store near heat, sparks, flame, or other ignition sources. Use mechanical ventilation whenever product is used in a confined space, heated above ambient temperatures, or agitated. Keep container sealed when not in use. Failure to comply may result in personnel death or injury. Seek medical attention in event of injury.**
- **Improper cleaning methods and use of unauthorized cleaning liquids or solvents can injure personnel and damage equipment. Failure to comply may result in personnel death or injury. Seek medical attention in event of injury.**
- **Cloths or rags saturated with solvent cleaning compound must be disposed of in accordance with authorized facility procedures. Failure to comply may result in personnel death or injury. Seek medical attention in event of injury.**

1. Clean all removed components except master cylinder with cleaning solvent and allow to dry.
2. Inspect components for wear, cracks, breaks, corrosion, or other damage. Replace if damaged.
3. Inspect master cylinder and damper for leakage. Replace if defective.
4. Remove any corrosion with a wire brush.

CLEANING AND INSPECTION - Continued

5. Inspect master pin hole (Figure 4, Item 2) for wear. If hole diameter exceeds 1.06 in. (26.92 mm), replace outer case assembly.
6. Inspect front roller pin hole (Figure 4, Item 1) for wear. If hole diameter exceeds 0.75 in. (19.1 mm), replace outer case assembly.
7. Inspect master pin (Figure 4, Item 4) for grooves. Replace master pin if depth of groove exceeds 0.094 in. (2.38 mm).
8. Replace bolt along with washer and nut every time bolt is removed.
9. Inspect roller (Figure 4, Item 6) for any signs of flatness. If any flat spots are evident, replace roller.
10. Measure inner and outer diameter of master rollers (Figure 4, Item 5). Replace master rollers if outer diameter is less than 1.78 in. (45.21 mm) or if inner diameter is greater than 0.94 in. (23.81 mm).
11. Measure inner slide slots (Figure 4, Item 3) at height of lip. Maximum length allowable is 2.25 in. (57.15 mm) and maximum height allowable is 1.125 in. (28.58 mm). Replace hydraulic brake actuator assembly if distortion of slot exceeds limitations.
12. Measure grooves on top inner slide for distance from flat edge to depth of groove. Replace inner slide if groove depth is greater than 0.125 in. (3.18 mm). Check upper roller (Figure 4, Item 6) for proper operation.
13. Measure grooves on bottom bolts. Replace bolts if grooves exceed 0.063 in. (1.59 mm) or if thread distortion is greater than 0.03 in. (0.79 mm).
14. Measure bolt holes (Figure 4, Item 7 and Item 8). Replace hydraulic brake actuator housing if any bolt holes are more than 0.125 in. (3.18 mm) oversize.

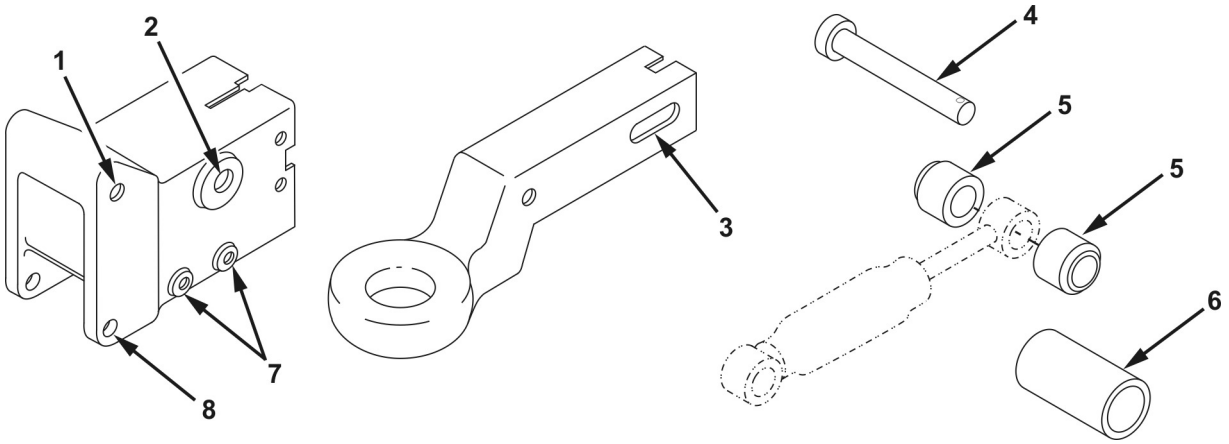

Figure 4. Hydraulic Brake Actuator Cleaning and Inspection.

END OF TASK

ASSEMBLY

1. Install upper bolt (Figure 5, Item 11) and roller (Figure 5, Item 12) into actuator housing (Figure 5, Item 14) and secure with new locknut (Figure 5, Item 13).
2. Carefully install push rod assembly (Figure 5, Item 15) and mounting plate (Figure 5, Item 4) onto master cylinder (Figure 5, Item 5). Install two capscrews (Figure 5, Item 9), nuts (Figure 5, Item 6), washers (Figure 5, Item 7), and springs (Figure 5, Item 8) to secure master cylinder mounting plate and push rod assembly to master cylinder. Tighten capscrews (Figure 5, Item 9) and nuts compressing springs to a measurement of 3.25 in. (82.55 mm).

WARNING

When installing breakaway lever spring onto breakaway spring lever and actuator housing, you must hold the spring in place until master cylinder is installed. If the spring is not physically held in place as defined, it can fall out of the actuator housing, resulting in no surge brake protection for the trailer. Failure to comply may result in personnel injury or equipment damage. Seek medical attention in event of injury.

3. Install breakaway lever spring (Figure 5, Item 3) and breakaway lever (Figure 5, Item 2) with attached breakaway cable (Figure 5, Item 1) into actuator housing (Figure 5, Item 14).
4. Install master cylinder (Figure 5, Item 5) with attached mounting plate (Figure 5, Item 4) into actuator housing (Figure 5, Item 14). Install four new machine screws (Figure 5, Item 10) to secure master cylinder mounting plate to brake actuator housing.

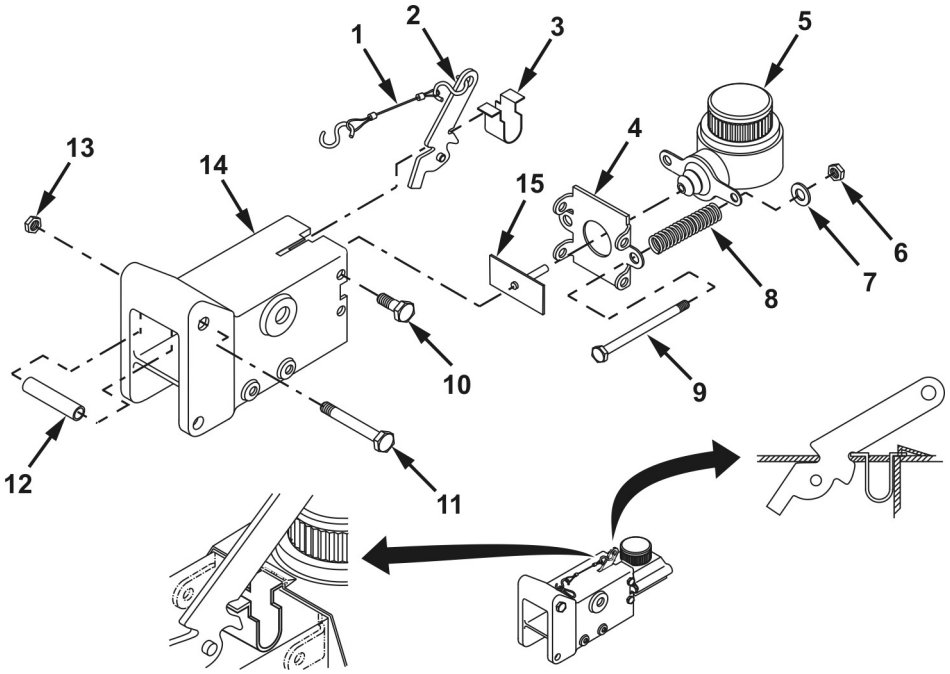

Figure 5. Hydraulic Brake Actuator Assembly.

ASSEMBLY - Continued

5. Install damper (Figure 6, Item 7) on lunette (Figure 6, Item 10) with damper pin (Figure 6, Item 8) and new cotter pin (Figure 6, Item 9).
6. Position two rollers (Figure 6, Item 6), with beveled sides facing out, on either side of damper (Figure 6, Item 7) inside lunette (Figure 6, Item 10). Use 5/8 in. deep well socket to hold damper and two rollers in place.

NOTE

5/8 in. deep well socket will be pushed out as master pin is installed.

7. Install lunette (Figure 6, Item 10) on brake actuator (Figure 6, Item 3) and master cylinder (Figure 6, Item 4) with master pin (Figure 6, Item 1), washer (Figure 6, Item 5), and new cotter pin (Figure 6, Item 2). Torque master pin to 50 lb-ft (68 N•m), then back off 1/4 turn.

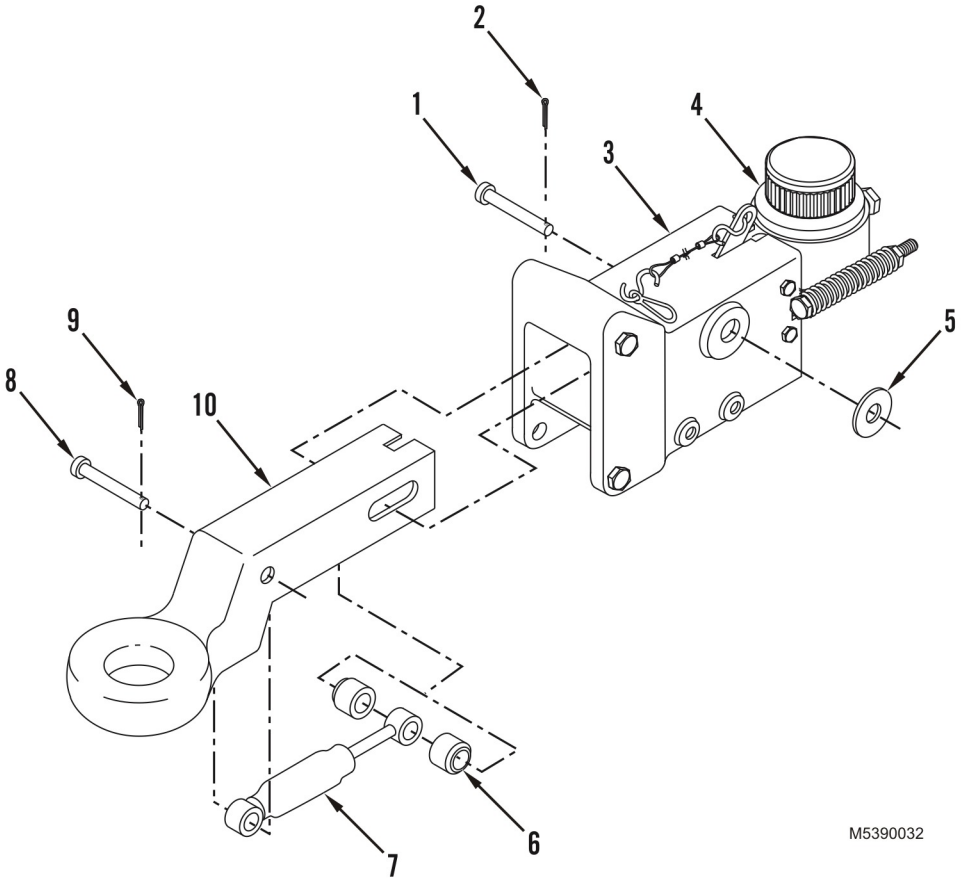

Figure 6. Hydraulic Brake Actuator Assembly.

END OF TASK

INSTALLATION

1. Position actuator assembly (Figure 7, Item 8) on trailer.

INSTALLATION - Continued

NOTE

5/8 in. capscrew (Figure 7, Item 5) is installed in front bolt hole and 1/2 in. capscrew is installed in rear bolt hole.

2. Install two capscrews (Figure 7, Item 5), two washers (Figure 7, Item 7), and two new locknuts (Figure 7, Item 6) securing hydraulic actuator assembly to trailer. Torque capscrews to 105 lb-ft (142 N•m).

NOTE

Master cylinder adapter (Figure 7, Item 4) requires a 12 mm wrench.

3. Remove temporary plug from flex brake line fitting end (Figure 7, Item 3).
4. Install flex brake line (Figure 7, Item 3) in master cylinder adapter (Figure 7, Item 4). Tighten flare fitting.
5. Remove cap (Figure 7, Item 1) from master cylinder (Figure 7, Item 9).
6. Install cover (Figure 7, Item 2) on master cylinder (Figure 7, Item 9). Then reinstall cap (Figure 7, Item 1) on master cylinder.

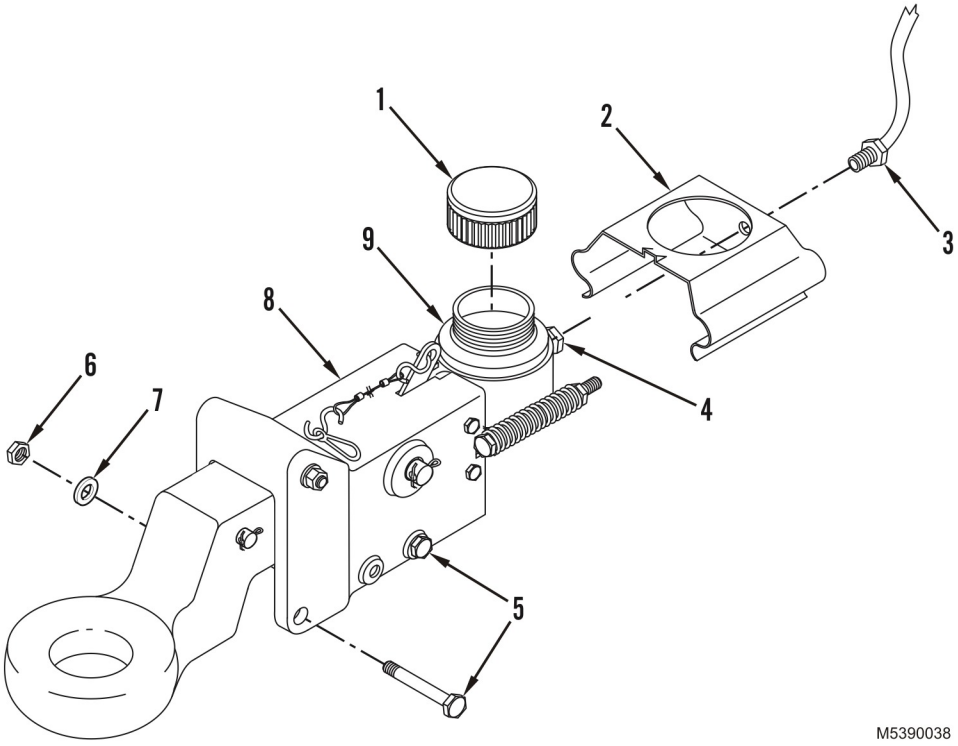

Figure 7. Hydraulic Brake Actuator Installation.

END OF TASK

FOLLOW-ON MAINTENANCE

1. Bleed hydraulic system (WP 0041).
2. Install safety chains (WP 0048).

END OF TASK

END OF WORK PACKAGE

FIELD MAINTENANCE
LUNETTE REPLACEMENT

INITIAL SETUP:

Tools and Special Tools
Tool Kit, General Mechanic's (WP 0096, Table 1, Item 1)

Materials/Parts
Brush, Wire (WP 0095, Table 1, Item 5)
Cleaning Solvent, Type II (WP 0095, Table 1, Item 6)
Cotter Pin Qty: 2 (WP 0076, Figure 8, Item 22)

Equipment Condition
Parked on level surface
Handbrake applied
Wheels chocked (WP 0005)
Intervehicular cable disconnected from towing vehicle (WP 0005)

WARNING

- **Drawbar is heavy – up to 420 lb (190.5 kg) loaded tongue weight. Use front support (landing) leg crank to raise and lower trailer drawbar. If support leg assembly is inoperative, use suitable lifting device to lift the drawbar. If a suitable lifting device is not available, remove load from trailer and use four or more people to lift drawbar. Failure to comply may result in personnel death or injury, or equipment damage. Seek medical attention in event of injury.**
- **DO NOT move the trailer laterally (push/pull) using the front support leg as a third wheel or trailer dolly. Mounting bracket or front support leg may fail. Failure to comply may result in personnel death or injury, or equipment damage. Seek medical attention in event of injury.**

REMOVAL

1. Remove cotter pin (Figure 1, Item 5) and washer (Figure 1, Item 7) from master pin (Figure 1, Item 4). Discard cotter pin.
2. Remove master pin (Figure 1, Item 4) from actuator assembly (Figure 1, Item 6).
3. Remove lunette assembly (Figure 1, Item 3) with attached damper (Figure 1, Item 9) and spacers (Figure 1, Item 8) from brake actuator (Figure 1, Item 6) by pulling lunette assembly (Figure 1, Item 3) straight forward.

END OF TASK

DISASSEMBLY

1. Remove cotter pin (Figure 1, Item 2) from pin (Figure 1, Item 1) securing damper (Figure 1, Item 9) to lunette (Figure 1, Item 3). Discard cotter pin.
2. Remove damper (Figure 1, Item 9) and two spacers (Figure 1, Item 8) from lunette (Figure 1, Item 3).

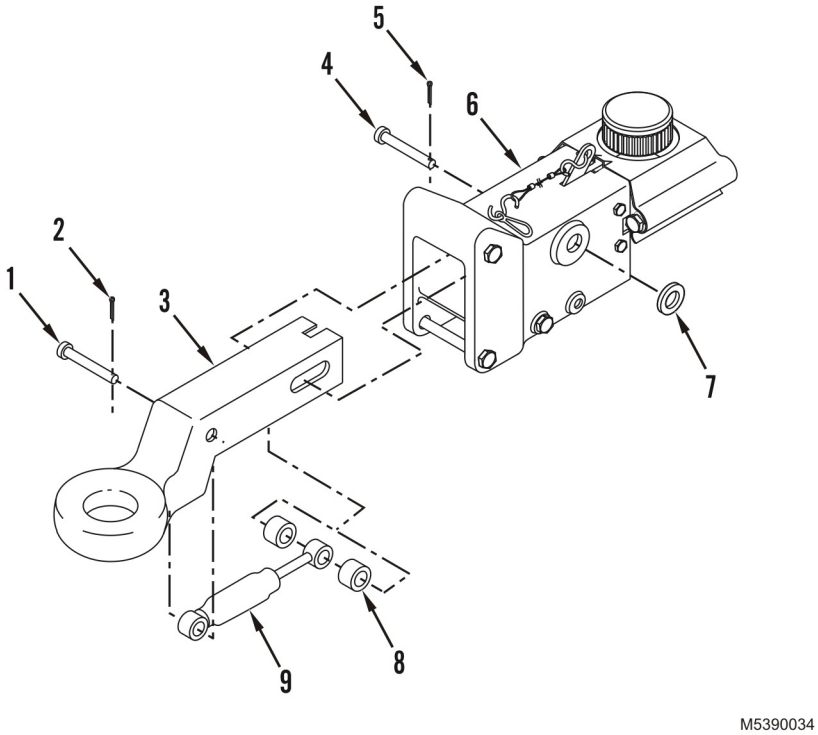

Figure 1. Lunette Removal.

END OF TASK

CLEANING AND INSPECTION

WARNING

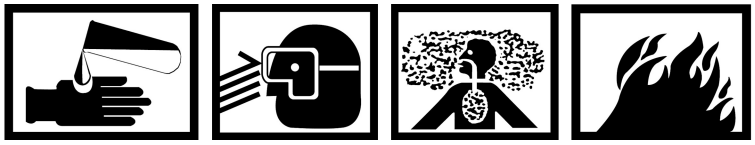

- **Solvent cleaning compound MIL-PRF-680 may be irritating to the eyes and skin. Wear protective gloves and goggles. First aid for skin contact: remove contaminated clothing. Wash skin thoroughly with soap and water. First aid for eye contact: flush with water for 15 minutes or until irritation subsides. If symptoms persist, seek medical attention. Failure to comply may result in personnel death or injury. Seek medical attention in event of injury.**
- **Use solvent cleaning compound MIL-PRF-680 in a well-ventilated area. Use respirator as needed. Accidental ingestion can cause irritation of digestive tract and respiratory tract. May cause lung and central nervous system damage. Can be fatal if swallowed. Inhalation of high/massive concentrations can cause coma or be fatal. First aid for ingestion: DO NOT induce vomiting. Seek immediate medical attention. First aid for inhalation: move to fresh air. If not breathing, provide artificial respiration. If symptoms persist, seek medical attention. Failure to comply may result in personnel death or injury. Seek medical attention in event of injury.**
- **MIL-PRF-680 solvent is combustible; DO NOT use or store near heat, sparks, flame, or other ignition sources. Use mechanical ventilation whenever product is used in a confined space, heated above ambient temperatures, or agitated. Keep container sealed when not in use. Failure to comply may result in personnel death or injury. Seek medical attention in event of injury.**
- **Improper cleaning methods and use of unauthorized cleaning liquids or solvents can injure personnel and damage equipment. Failure to comply may result in personnel death or injury. Seek medical attention in event of injury.**
- **Cloths or rags saturated with solvent cleaning compound must be disposed of in accordance with authorized facility procedures. Failure to comply may result in personnel death or injury. Seek medical attention in event of injury.**

1. Clean all removed components with cleaning solvent and allow to dry.
2. Inspect components for wear, cracks, breaks, corrosion, or other damage. Replace if damaged.
3. Inspect damper (Figure 1, Item 9) for leaks. Replace if leaking is evident.
4. Remove any corrosion with a wire brush.

END OF TASK

ASSEMBLY

1. Install damper (Figure 1, Item 9) on lunette (Figure 1, Item 3) with pin (Figure 1, Item 1) and new cotter pin (Figure 1, Item 2).
2. Position two spacers (Figure 1, Item 8), with beveled sides facing out, on either side of damper (Figure 1, Item 9) inside lunette (Figure 1, Item 3). Use 5/8 in. deep well socket to hold damper (Figure 1, Item 9) and two spacers (Figure 1, Item 8) in place in lunette.

END OF TASK

INSTALLATION

1. Install lunette assembly (Figure 2, Item 3) with attached damper (Figure 2, Item 9) and spacers (Figure 2, Item 8) into actuator housing (Figure 2, Item 6).

NOTE

5/8 in. deep well socket will be pushed out as master pin is installed.

2. Install master pin (Figure 2, Item 4) through lunette assembly (Figure 2, Item 3), damper (Figure 2, Item 9), spacers (Figure 2, Item 8), and actuator (Figure 2, Item 6).
3. Secure master pin (Figure 2, Item 4) with washer (Figure 2, Item 7) and new cotter pin (Figure 2, Item 5).

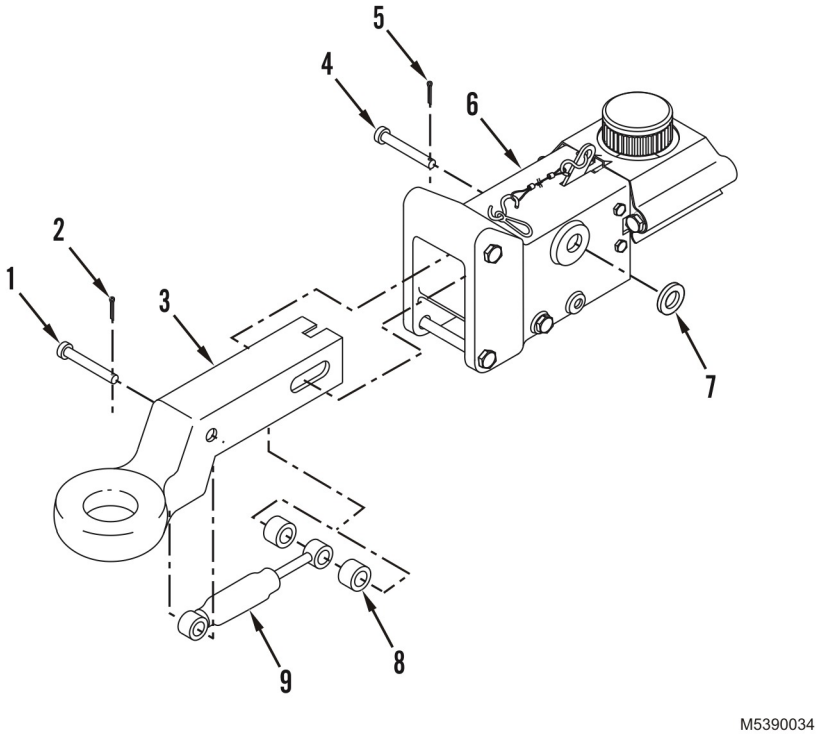

Figure 2. Lunette Installation.

END OF TASK

END OF WORK PACKAGE

FIELD MAINTENANCE
MASTER CYLINDER REPLACEMENT

INITIAL SETUP:

Tools and Special Tools
Tool Kit, General Mechanic's (WP 0096, Table 1, Item 1)

References
WP 0041

Equipment Condition
Handbrake applied
Wheels chocked (WP 0005)
Safety chains removed (WP 0048)
Intervehicular cable disconnected from towing vehicle (WP 0005)

WARNING

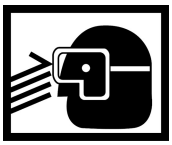

Eye injury may result if brake fluid comes in contact with eyes. Always wear eye protection when working with brake fluid. Failure to comply may result in personnel injury. Seek medical attention in event of injury.

WARNING

Accidental or intentional introduction of liquid contaminants into the environment is a violation of state, federal, and military regulations. Refer to Army Petroleum, Oils, and Lubricants (POL) for information concerning storage, use, and disposal of these liquids. Failure to comply may cause damage to environment and health of personnel. Seek medical attention in the event of an injury.

REMOVAL

NOTE

Master cylinder adapter (Figure 1, Item 2) requires a 12 mm wrench.

1. Disconnect fitting on flex brake line (Figure 1, Item 4) from master cylinder adapter (Figure 1, Item 2). Install temporary plug in flex brake line fitting.
2. Remove master cylinder cap (Figure 1, Item 1) from master cylinder assembly (Figure 1, Item 11).
3. Remove master cylinder cover (Figure 1, Item 3) from master cylinder assembly (Figure 1, Item 11), then reinstall master cylinder cap (Figure 1, Item 1).
4. Remove two nuts (Figure 1, Item 5), two washers (Figure 1, Item 6), two springs (Figure 1, Item 7), and two capscrews (Figure 1, Item 9) securing master cylinder (Figure 1, Item 11) to master cylinder mounting plate (Figure 1, Item 8).
5. Carefully remove master cylinder (Figure 1, Item 11) from master cylinder mounting plate (Figure 1, Item 8) and push rod assembly (Figure 1, Item 10).

END OF TASK

INSTALLATION

1. Carefully install master cylinder (Figure 1, Item 11) on push rod assembly (Figure 1, Item 10) and master cylinder mounting plate (Figure 1, Item 8).
2. Install two capscrews (Figure 1, Item 9), two springs (Figure 1, Item 7), two washers (Figure 1, Item 6), and two nuts (Figure 1, Item 5) securing master cylinder (Figure 1, Item 11) to master cylinder mounting plate (Figure 1, Item 8). Tighten capscrews and nuts compressing springs to a measurement of 3.25 in. (82.6 mm).
3. Remove master cylinder cap (Figure 1, Item 1) from master cylinder (Figure 1, Item 11).
4. Install master cylinder cover (Figure 1, Item 3) on master cylinder assembly (Figure 1, Item 11).
5. Install master cylinder cap (Figure 1, Item 1) on master cylinder (Figure 1, Item 11).
6. Remove temporary plug from flex brake line fitting end (Figure 1, Item 4).

NOTE

Master cylinder adapter (Figure 1, Item 2) requires a 12 mm wrench.

7. Connect flex brake line (Figure 1, Item 4) to master cylinder adapter (Figure 1, Item 2). Tighten flex brake line fitting end.

INSTALLATION - Continued

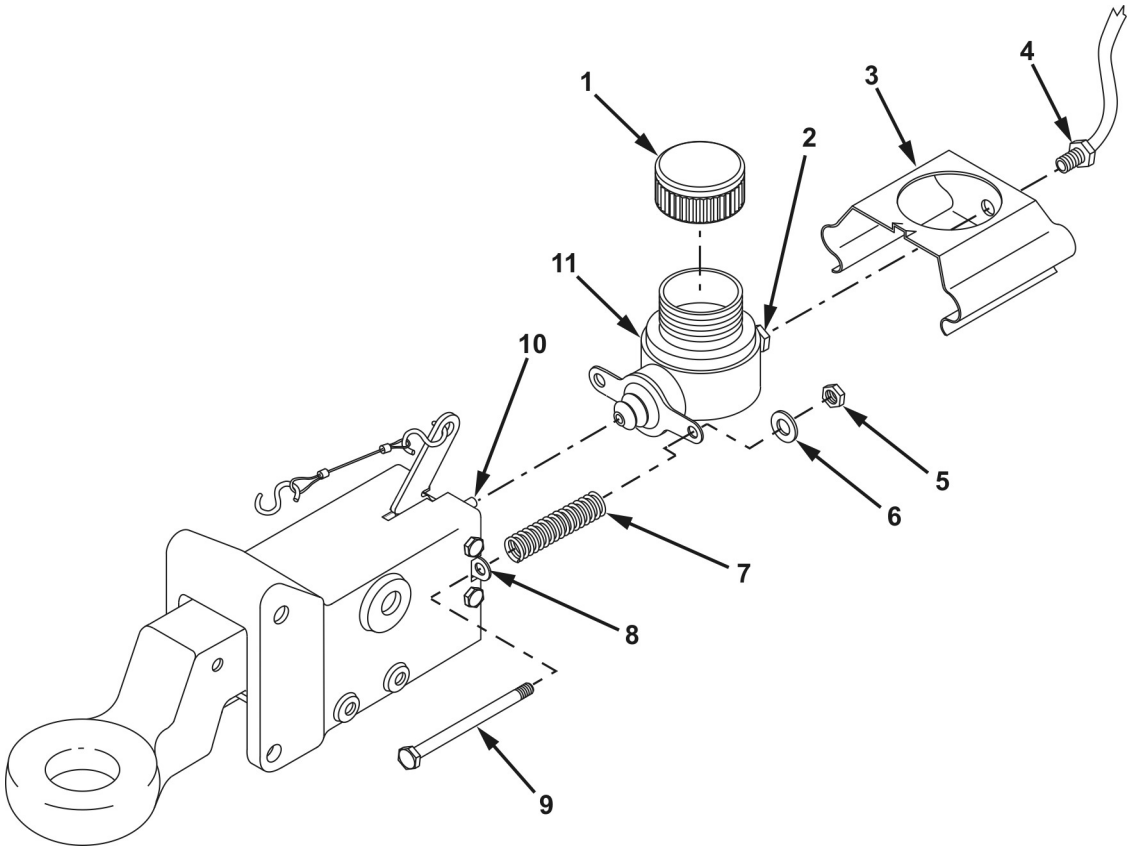

Figure 1. Master Cylinder Removal and Installation.

END OF TASK

FOLLOW-ON MAINTENANCE

1. Bleed hydraulic system (WP 0041).
2. Install safety chains (WP 0048).

END OF TASK

END OF WORK PACKAGE

FIELD MAINTENANCE
HYDRAULIC BRAKE LINES REPLACEMENT

INITIAL SETUP:

Tools and Special Tools
Tool Kit, General Mechanic's (WP 0096, Table 1, Item 1)
Tool Kit, Blind Riveter (WP 0096, Table 1, Item 12)

Materials/Parts
Brush, Wire (WP 0095, Table 1, Item 5)
Cleaning Solvent, Type II (WP 0095, Table 1, Item 6)
Rag, Wiping (WP 0095, Table 1, Item 28)
Rivet Qty: 4 (WP 0076, Figure 8, Item 30)

Materials/Parts (cont.)
Rivet Qty: 2 (WP 0076, Figure 8, Item 31)
Rivet Qty: 1 (WP 0076, Figure 8, Item 42)

References
WP 0041

Equipment Condition
Handbrake applied
Wheels chocked (WP 0005)

WARNING

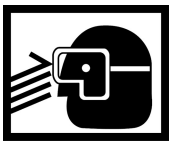

Eye injury may result if brake fluid comes in contact with eyes. Always wear eye protection when working with brake fluid. Failure to comply may result in personnel injury. Seek medical attention in event of injury.

WARNING

Accidental or intentional introduction of liquid contaminants into the environment is a violation of state, federal, and military regulations. Refer to Army Petroleum, Oils, and Lubricants (POL) for information concerning storage, use, and disposal of these liquids. Failure to comply may cause damage to environment and health of personnel. Seek medical attention in the event of an injury.

FRONT FLEX BRAKE LINE REMOVAL

NOTE

Master cylinder adapter requires a 12 mm wrench.

1. Disconnect flex brake line (Figure 1, Item 1) from master cylinder adapter (Figure 1, Item 2), and install temporary plug in master cylinder adapter.
2. Remove clip (Figure 1, Item 6), disconnect flex brake line (Figure 1, Item 1) from solid brake line (Figure 1, Item 5), and install temporary plug in solid brake line.
3. Remove rivet (Figure 1, Item 3) and clamp (Figure 1, Item 4) securing flex brake line (Figure 1, Item 1) to frame. Remove flex brake line. Discard rivet.

END OF TASK

FRONT FLEX BRAKE LINE INSTALLATION

1. Remove temporary plug from solid brake line (Figure 1, Item 5), connect flex brake line (Figure 1, Item 1) to solid brake line, and install clip (Figure 1, Item 6). Tighten flare fitting.
2. Remove temporary plug from master cylinder adapter (Figure 1, Item 2), and connect flex brake line (Figure 1, Item 1) to master cylinder adapter. Tighten flare fitting.
3. Install clamp (Figure 1, Item 4) and new rivet (Figure 1, Item 3) securing flex brake line (Figure 1, Item 1) to frame.

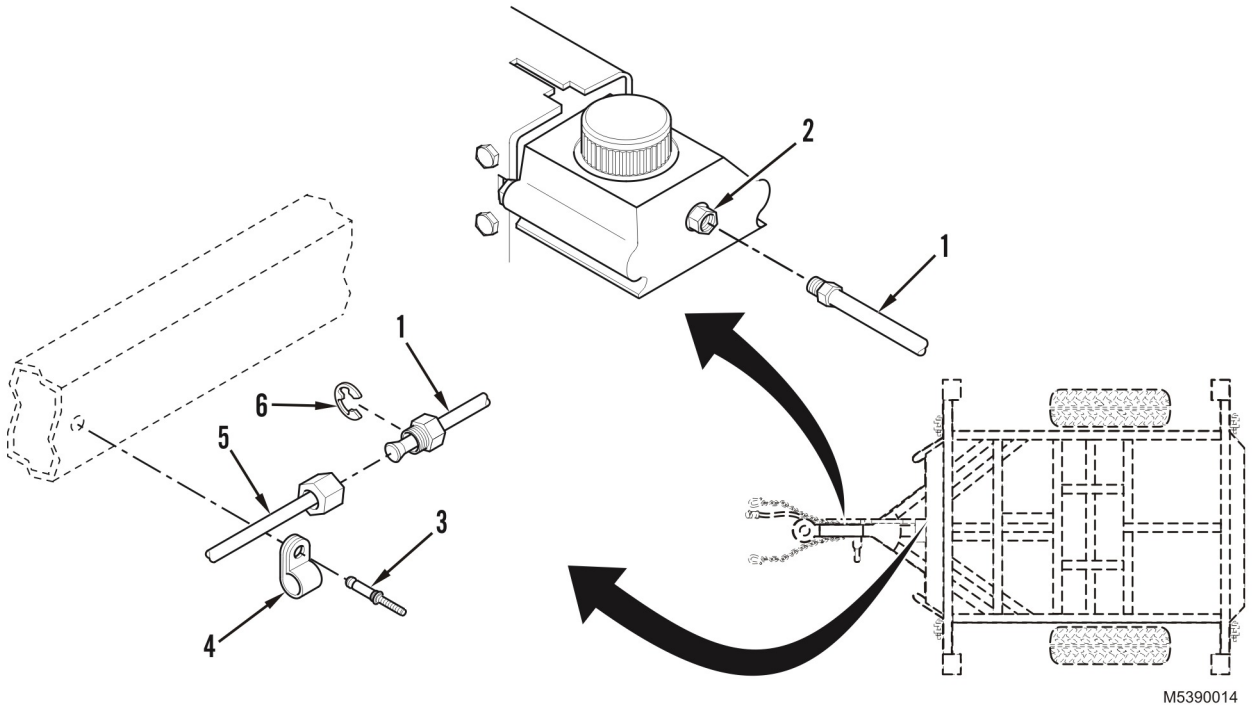

Figure 1. Front Flex Brake Line Removal and Installation.

END OF TASK

FRONT SOLID BRAKE LINE REMOVAL

1. Remove clip (Figure 1, Item 6), disconnect solid brake line (Figure 2, Item 1) from flex brake line (Figure 2, Item 5), and install temporary plug in flex brake line.
2. Disconnect solid brake line (Figure 2, Item 1) from "tee" (Figure 2, Item 2), and install temporary plug in "tee."
3. Remove rivet (Figure 2, Item 3) and clamp (Figure 2, Item 4) securing solid brake line (Figure 2, Item 1) to frame. Remove solid brake line. Discard rivet.

END OF TASK

FRONT SOLID BRAKE LINE INSTALLATION

1. Remove temporary plug from "tee" (Figure 2, Item 2), and connect solid brake line (Figure 2, Item 1) to "tee." Tighten flare fitting.
2. Remove temporary plug from flex brake line (Figure 2, Item 5), and connect solid brake line (Figure 2, Item 1) to flex brake line, and install clip (Figure 1, Item 6). Tighten flare fitting.
3. Install clamp (Figure 2, Item 4) and new rivet (Figure 2, Item 3) securing solid brake line (Figure 2, Item 1) to frame.

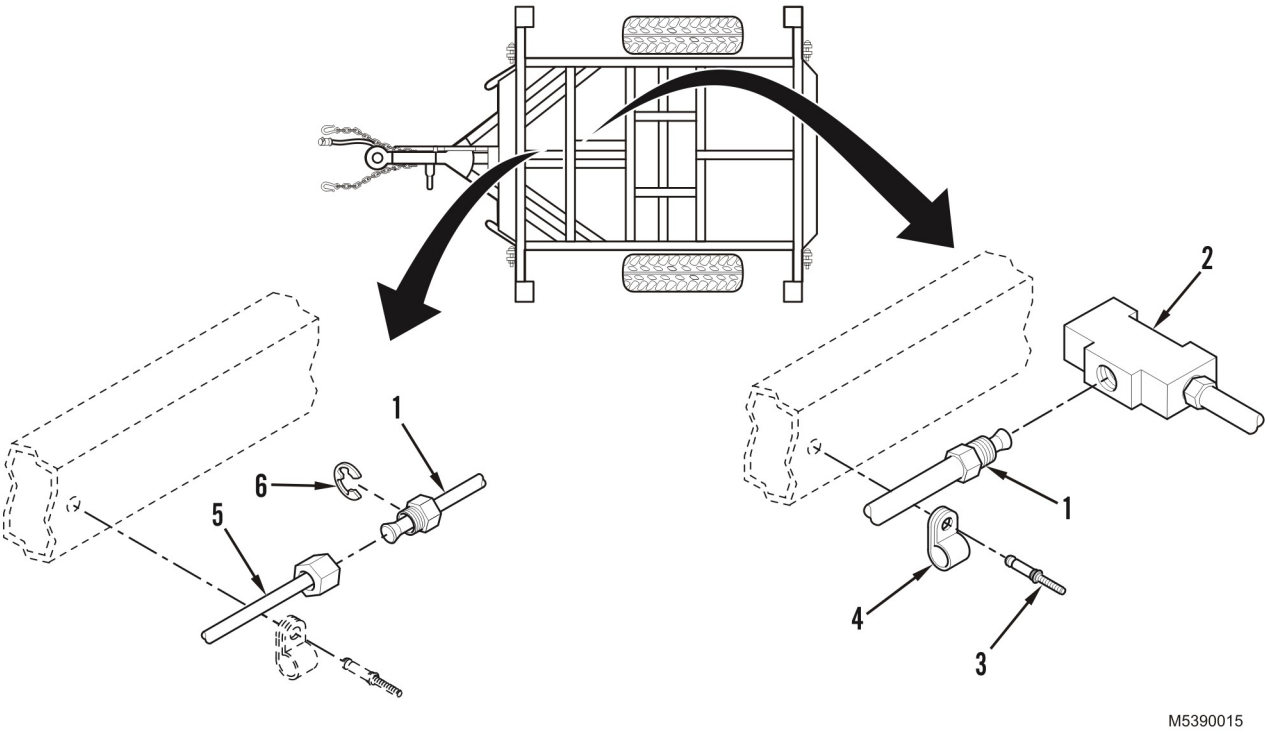

Figure 2. Front Solid Brake Line Removal and Installation.

END OF TASK

REAR FLEX BRAKE LINE REMOVAL

NOTE

Both flex brake lines are removed in the same manner.

1. Remove clip (Figure 3, Item 9) and clip (Figure 3, Item 2) from bracket (Figure 3, Item 4) securing flex brake line (Figure 3, Item 5) and solid brake line (Figure 3, Item 3).
2. Remove capscrew (Figure 3, Item 6) and clamp (Figure 3, Item 7) securing flex brake line (Figure 3, Item 5) to torsion arm (Figure 3, Item 8).
3. Disconnect flex brake line (Figure 3, Item 5) from solid brake line (Figure 3, Item 3), and install temporary plug in solid brake line.
4. Disconnect flex brake line (Figure 3, Item 5) from wheel cylinder (Figure 3, Item 1), and install temporary wheel plug in cylinder.

END OF TASK

REAR FLEX BRAKE LINE INSTALLATION

NOTE

Both flex brake lines are installed in the same manner.

1. Remove temporary plug from wheel cylinder (Figure 3, Item 1), and connect flex brake line (Figure 3, Item 5) to wheel cylinder. Tighten flare fitting.
2. Remove temporary plug from solid brake line (Figure 3, Item 3), and connect solid brake line to flex brake line (Figure 3, Item 5). Tighten flare fitting.
3. Install clip (Figure 3, Item 2) securing flex brake line (Figure 3, Item 5) and solid brake line (Figure 3, Item 3) to bracket (Figure 3, Item 4), and install clip (Figure 3, Item 9).
4. Install clamp (Figure 3, Item 7) and capscrew (Figure 3, Item 6) securing flex brake line (Figure 3, Item 5) to torsion arm (Figure 3, Item 8).

REAR FLEX BRAKE LINE INSTALLATION - Continued

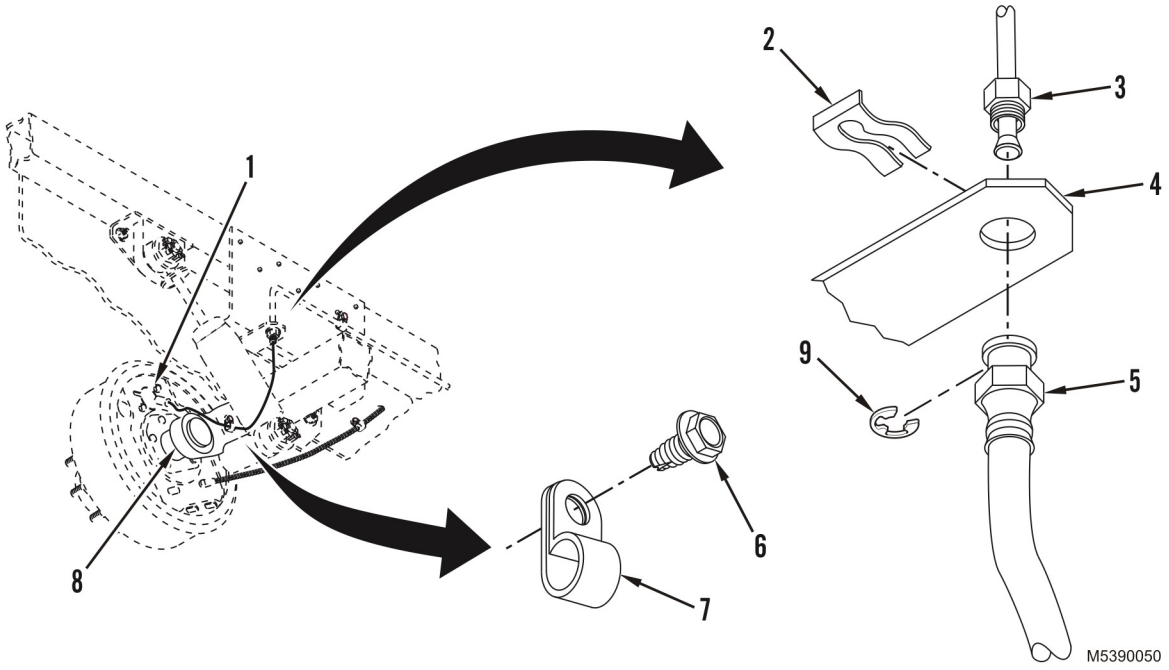

Figure 3. Rear Flex Brake Line Removal and Installation.

END OF TASK

REAR SOLID BRAKE LINE REMOVAL

NOTE

Both solid brake lines are removed in the same manner.

1. Remove clip (Figure 4, Item 8) and clip (Figure 4, Item 3), securing flex brake line (Figure 4, Item 5) and solid brake line (Figure 4, Item 2) to bracket (Figure 4, Item 4).
2. Disconnect flex brake line (Figure 4, Item 5) from solid brake line (Figure 4, Item 2), and install temporary plug in flex brake line.
3. Disconnect solid brake line (Figure 4, Item 2) from "tee" (Figure 4, Item 1), and install temporary plug in "tee."
4. Remove two rivets (Figure 4, Item 7) and two clamps (Figure 4, Item 6), securing solid brake line (Figure 4, Item 2) to frame. Remove solid brake line. Discard rivets.

END OF TASK

REAR SOLID BRAKE LINE INSTALLATION

NOTE

Both solid brake lines are installed in the same manner.

1. Remove temporary plug from "tee" (Figure 4, Item 1), and connect solid brake line (Figure 4, Item 2) to "tee." Tighten flare fitting.
2. Remove temporary plug from flex brake line (Figure 4, Item 5), and connect solid brake line (Figure 4, Item 2) to flex brake line. Tighten flare fitting.
3. Install clip (Figure 4, Item 3), securing flex brake line (Figure 4, Item 5) and solid brake line (Figure 4, Item 2) to bracket (Figure 4, Item 4), and install clip (Figure 4, Item 8).
4. Install two clamps (Figure 4, Item 6) and two new rivets (Figure 4, Item 7), securing flex brake line (Figure 4, Item 5) and solid brake line (Figure 4, Item 2) to frame.

REAR SOLID BRAKE LINE INSTALLATION - Continued

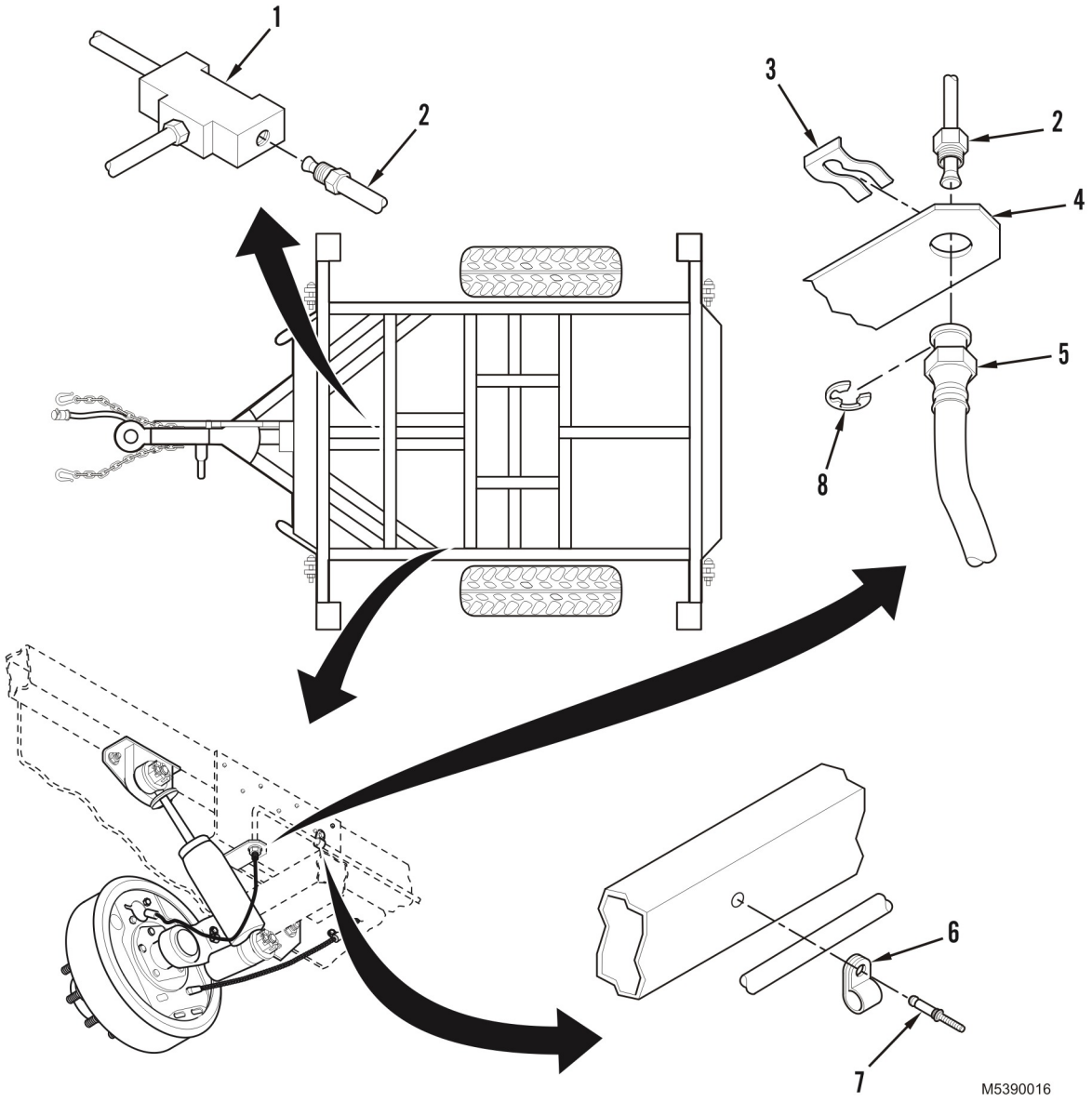

Figure 4. Rear Solid Brake Line Removal and Installation.

END OF TASK

FOLLOW-ON MAINTENANCE

Bleed hydraulic system (WP 0041).

END OF TASK

END OF WORK PACKAGE

FIELD MAINTENANCE
HUB/DRUM, RACE, AND BEARING SEAL MAINTENANCE

INITIAL SETUP:

Tools and Special Tools
- Tool Kit, General Mechanic's (WP 0096, Table 1, Item 1)
- Wrench: 1-1/2-in. (WP 0096, Table 1, Item 13)

Materials/Parts
- Brush, Wire (WP 0095, Table 1, Item 5)
- Cleaning Solvent, Type II (WP 0095, Table 1, Item 6)
- Grease, Automotive and Artillery (WP 0095, Table 1, Item 10)

Materials/Parts (cont.)
- Lubricant, Dry (WP 0095, Table 1, Item 18)
- Rag, Wiping (WP 0095, Table 1, Item 28)
- Cotter Pin (WP 0077, Figure 9, Item 3)

Equipment Condition
- Parked on level surface
- Handbrake applied
- Wheels chocked (WP 0005)
- Wheels removed (Old Jack) (WP 0007)
- Wheels removed (New Jack) (WP 0008)

WARNING

Accidental or intentional introduction of liquid contaminants into the environment is a violation of state, federal, and military regulations. Refer to Army Petroleum, Oils, and Lubricants (POL) for information concerning storage, use, and disposal of these liquids. Failure to comply may cause damage to environment and health of personnel. Seek medical attention in the event of an injury.

REMOVAL

1. Remove grease cap (Figure 1, Item 1).
2. Remove cotter pin (Figure 1, Item 2) and discard.
3. Remove spindle nut (Figure 1, Item 3) and washer (Figure 1, Item 4).
4. Remove hub/drum (Figure 1, Item 5) with bearings and grease seal installed.

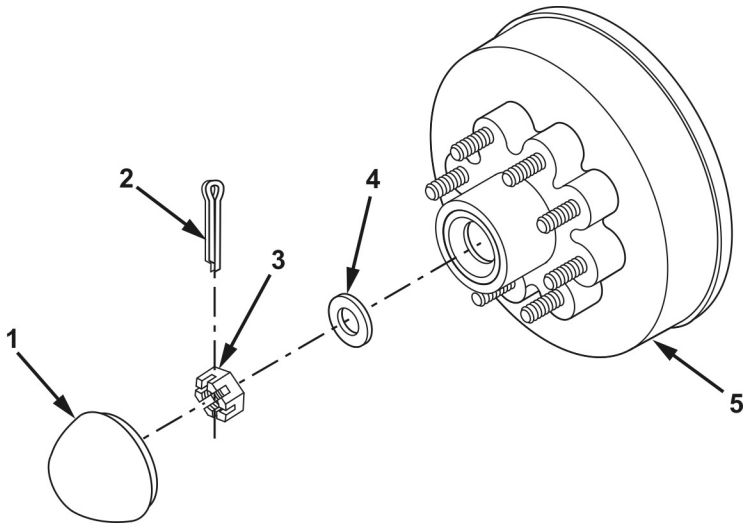

Figure 1. Hub/Drum, Race, and Bearing Seal Removal.

END OF TASK

DISASSEMBLY

1. Remove grease seal (Figure 2, Item 3) from hub/drum (Figure 2, Item 6). Discard grease seal.
2. Remove inner bearing (Figure 2, Item 4) and inner race (Figure 2, Item 5) from hub/drum (Figure 2, Item 6).
3. Remove outer bearing (Figure 2, Item 1) and outer race (Figure 2, Item 2) from hub/drum (Figure 2, Item 6).

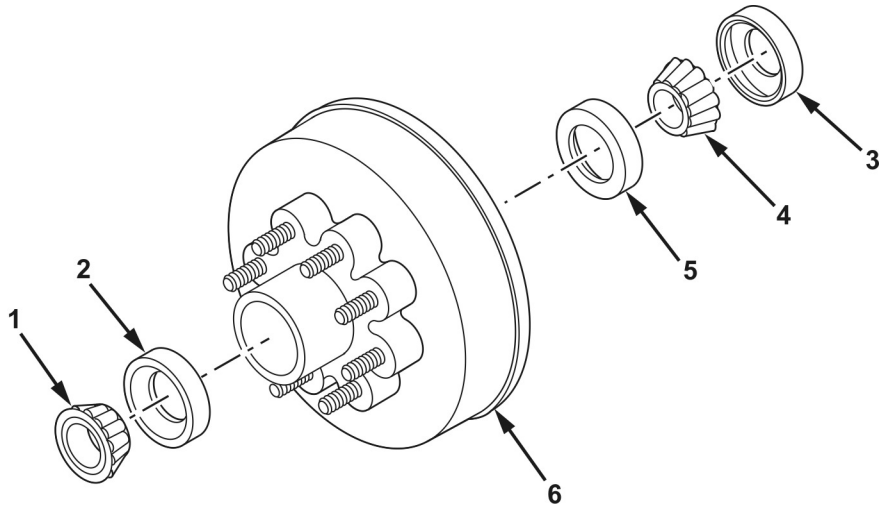

Figure 2. Hub/Drum, Race, and Bearing Seal Disassembly.

END OF TASK

CLEANING AND INSPECTION

WARNING

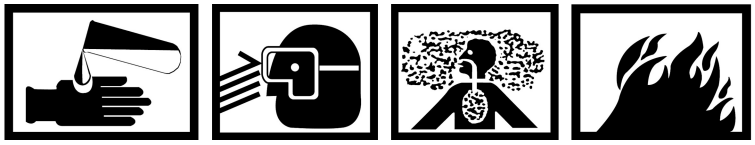

- **Solvent cleaning compound MIL-PRF-680 may be irritating to the eyes and skin. Wear protective gloves and goggles. First aid for skin contact: remove contaminated clothing. Wash skin thoroughly with soap and water. First aid for eye contact: flush with water for 15 minutes or until irritation subsides. If symptoms persist, seek medical attention. Failure to comply may result in personnel death or injury. Seek medical attention in event of injury.**
- **Use solvent cleaning compound MIL-PRF-680 in a well-ventilated area. Use respirator as needed. Accidental ingestion can cause irritation of digestive tract and respiratory tract. May cause lung and central nervous system damage. Can be fatal if swallowed. Inhalation of high/massive concentrations can cause coma or be fatal. First aid for ingestion: DO NOT induce vomiting. Seek immediate medical attention. First aid for inhalation: move to fresh air. If not breathing, provide artificial respiration. If symptoms persist, seek medical attention. Failure to comply may result in personnel death or injury. Seek medical attention in event of injury.**
- **MIL-PRF-680 solvent is combustible; DO NOT use or store near heat, sparks, flame, or other ignition sources. Use mechanical ventilation whenever product is used in a confined space, heated above ambient temperatures, or agitated. Keep container sealed when not in use. Failure to comply may result in personnel death or injury. Seek medical attention in event of injury.**
- **Improper cleaning methods and use of unauthorized cleaning liquids or solvents can injure personnel and damage equipment. Failure to comply may result in personnel death or injury. Seek medical attention in event of injury.**
- **Cloths or rags saturated with solvent cleaning compound must be disposed of in accordance with authorized facility procedures. Failure to comply may result in personnel death or injury. Seek medical attention in event of injury.**

1. Clean all removed components with cleaning solvent and allow to dry.
2. Inspect components for wear, cracks, breaks, corrosion, or other damage. Replace if damaged.
3. Remove any corrosion with a wire brush.

CLEANING AND INSPECTION - Continued

WARNING

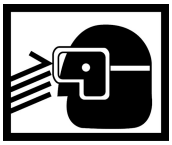

Removing metal parts could be dangerous to personnel. Injury may result if metal chips contact eyes. Always wear eye protection when replacing wheel stud. Failure to comply may result in personnel injury. Seek medical attention in event of injury.

4. Drive stud (Figure 3, Item 1) out of hub/drum (Figure 3, Item 2). Discard stud.
5. Align splines on stud (Figure 3, Item 1) with splines in hub/drum (Figure 3, Item 2) and press stud into hub/drum until stud shoulder seats against hub/drum.

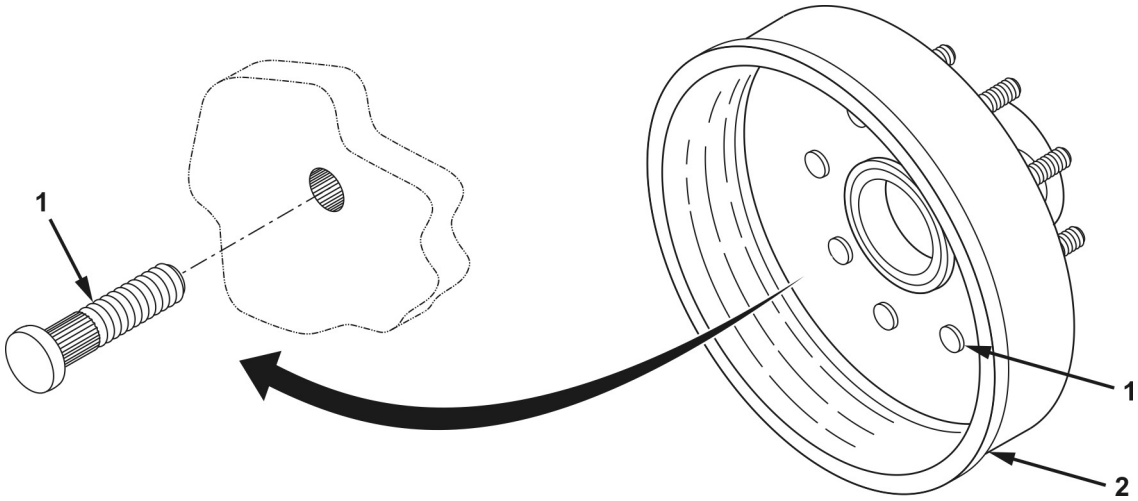

Figure 3. Hub/Drum, Race, and Bearing Seal Cleaning and Inspection.

END OF TASK

ASSEMBLY

1. Apply a thin film of lubricant to surface of new outer bearing race (Figure 4, Item 2), and install new outer bearing race in hub/drum (Figure 4, Item 6).
2. Apply a thin film of lubricant to surface of inner bearing race (Figure 4, Item 5), and install inner bearing race in hub/drum (Figure 4, Item 6).
3. Pack two new bearings (Figure 4, Item 1 and Item 4) with grease by pressing fresh bearing grease into bearing roller area.
4. Install new inner bearing (Figure 4, Item 4) in hub/drum (Figure 4, Item 6).
5. Apply a thin film of lubricant to the outer edge of new grease seal (Figure 4, Item 3), and install grease seal in hub/drum (Figure 4, Item 6). Wipe excessive lubricant from outer surface of seal.

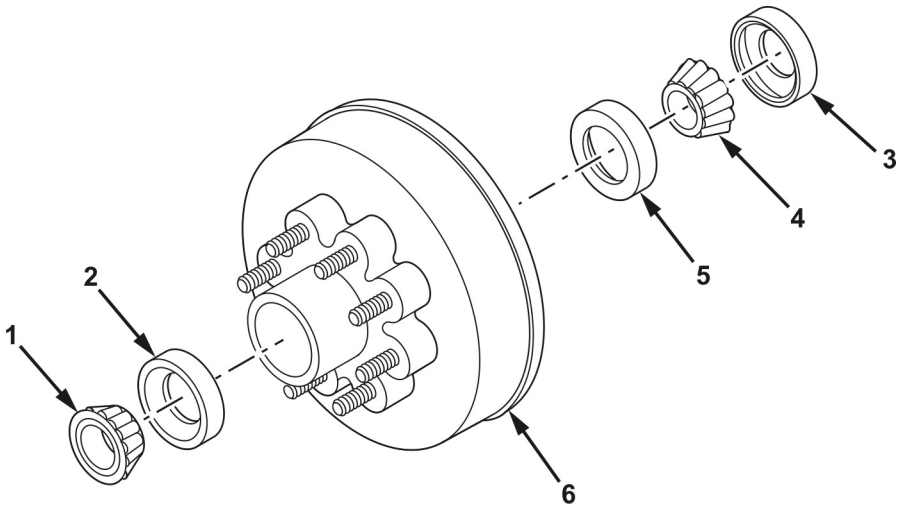

Figure 4. Hub/Drum, Race, and Bearing Seal Assembly.

END OF TASK

INSTALLATION

1. Install hub/drum (Figure 5, Item 2), with inner bearing and seal, on axle spindle (Figure 5, Item 3).
2. Install new outer bearing (Figure 5, Item 7), washer (Figure 5, Item 6), and adjusting nut (Figure 5, Item 5).
3. Ensure that the adjusting nut (Figure 5, Item 5) turns freely on the axle spindle (Figure 5, Item 3) and the brakes are not dragging.
4. Draw up the adjusting nut (Figure 5, Item 5) while revolving the wheel in both directions, until a slight binding is felt which indicates that all surfaces are in contact. Then back off the adjusting nut 1/16 to 1/4 turn or sufficiently to allow the wheel to rotate freely.
5. Install a cotter pin (Figure 5, Item 1) and bend ends to secure the adjusting nut (Figure 5, Item 5).
6. Install grease cap (Figure 5, Item 4) on hub/drum (Figure 5, Item 2).

INSTALLATION - Continued

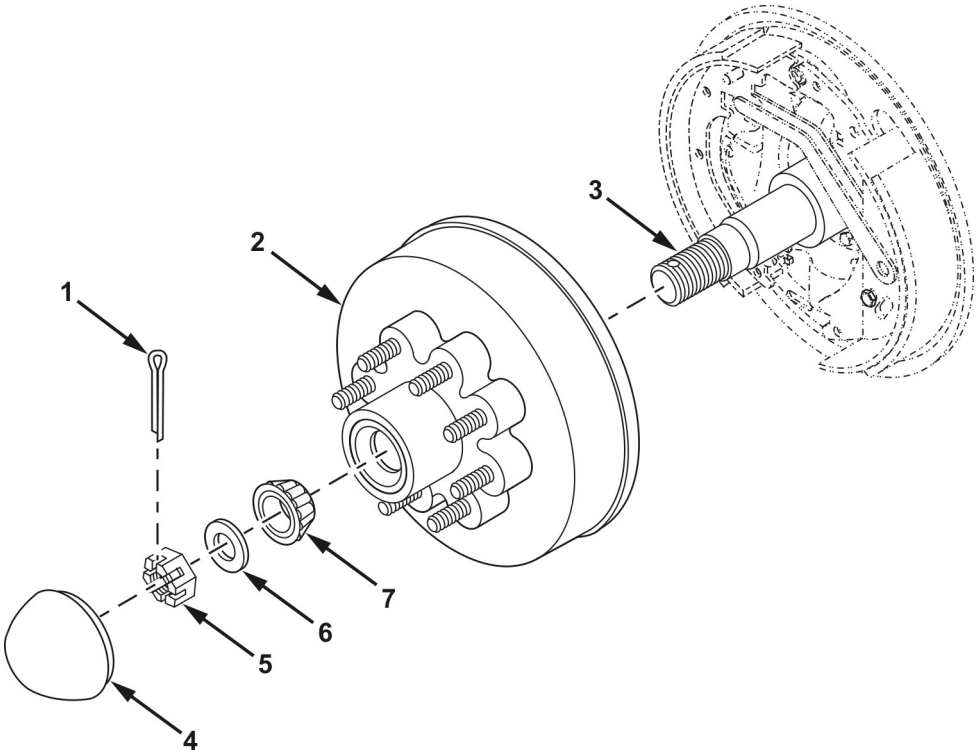

Figure 5. Hub/Drum, Race, and Bearing Seal Installation.

END OF TASK

FOLLOW-ON MAINTENANCE

Install wheel (WP 0007) or (WP 0008).

END OF TASK

END OF WORK PACKAGE

FIELD MAINTENANCE
WHEEL AND TIRE ASSEMBLY REPAIR

INITIAL SETUP:

Not Applicable

Refer to TM 9-2320-280-20-2.

END OF TASK

END OF WORK PACKAGE

FIELD MAINTENANCE
SAFETY CHAIN REPLACEMENT

INITIAL SETUP:

Tools and Special Tools
Tool Kit, General Mechanic's (WP 0096, Table 1, Item 1)

Materials/Parts
Locknut (WP 0080, Figure 12, Item 3)

Equipment Condition
Handbrake applied
Wheels chocked (WP 0005)

REMOVAL

NOTE

Spacer may fall out when capscrew is removed.

Remove locknut (Figure 1, Item 3), capscrew (Figure 1, Item 6), and spacer (Figure 1, Item 5) securing two safety chains (Figure 1, Items 4) and mounts (Figure 1, Item 1) to drawbar assembly (Figure 1, Item 2). Discard locknut.

END OF TASK

INSTALLATION

NOTE

Ensure spacer remains aligned with mounting hole.

1. Install capscrew (Figure 1, Item 6) through safety chain mount (Figure 1, Item 1), spacer (Figure 1, Item 5), and drawbar assembly (Figure 1, Item 2).
2. Install safety chain mount (Figure 1, Item 1) onto capscrew (Figure 1, Item 6). Install new locknut (Figure 1, Item 3).
3. Tighten locknut (Figure 1, Item 3).

INSTALLATION - Continued

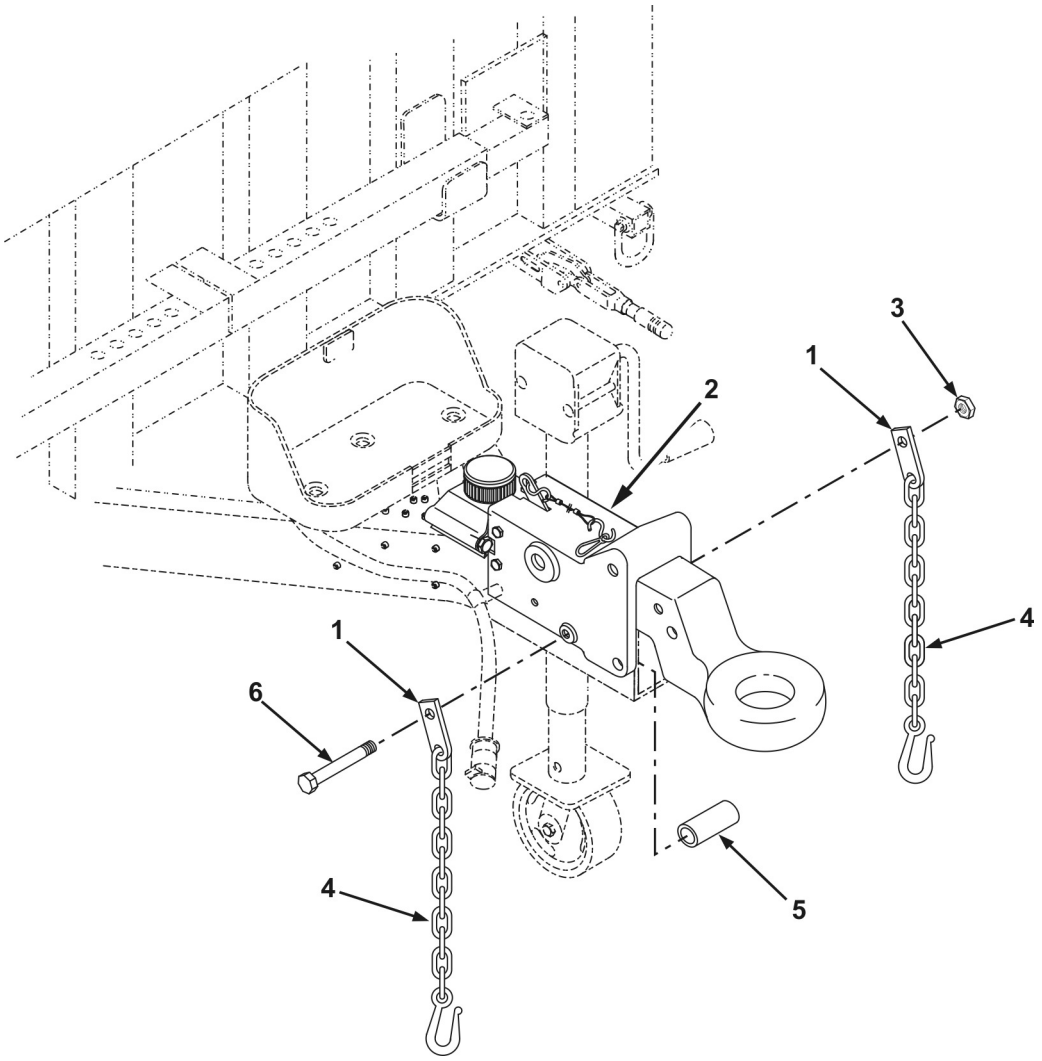

Figure 1. Safety Chain Removal and Installation.

END OF TASK

END OF WORK PACKAGE

FIELD MAINTENANCE
FRONT SUPPORT LEG AND PIVOT REPAIR

INITIAL SETUP:

Tools and Special Tools
- Tool Kit, General Mechanic's (WP 0096, Table 1, Item 1)
- Jack Stand (WP 0096, Table 1, Item 10)
- Wrench, Torque: 3/8-in. drive, 5-75 lb-ft (WP 0096, Table 1, Item 16)

Materials/Parts
- Cleaning Solvent, Type II (WP 0095, Table 1, Item 6)
- Grease, Automotive and Artillery (WP 0095, Table 1, Item 10)
- Locknut Qty: 2 (WP 0081, Figure 13, Item 6)
- Locknut Qty: 2 (WP 0081, Figure 13, Item 8)
- Locknut Qty: 2 (WP 0083, Figure 15, Item 33)

Materials/Parts (cont.)
- Lockwasher (WP 0083, Figure 15, Item 29)
- Self-Tapping Screw (WP 0081, Figure 13, Item 3)
- Self-Tapping Screw (WP 0081, Figure 13, Item 13)

References
- WP 0064

Equipment Condition
- Parked on level surface
- Wheels chocked (WP 0005)
- Handbrake applied
- Rear stabilizers installed

WARNING

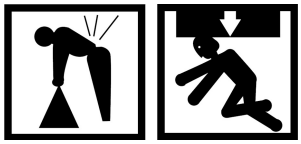

Tongue weight is 420 lb (191 kg). Provide adequate support and use assistance during procedure. Ensure that any lifting device used is in good condition and of suitable load capacity. Keep clear of heavy parts supported only by lifting device. Failure to comply may result in personnel death or injury. Seek medical attention in event of injury.

WARNING

Accidental or intentional introduction of liquid contaminants into the environment is a violation of state, federal, and military regulations. Refer to Army Petroleum, Oils, and Lubricants (POL) for information concerning storage, use, and disposal of these liquids. Failure to comply may cause damage to environment and health of personnel. Seek medical attention in the event of an injury.

FRONT SUPPORT LEG REMOVAL

1. Place a jack stand (Figure 1, Item 1) under each front trailer corner.
2. Using front support leg handle (Figure 1, Item 2), lower trailer onto jack stands (Figure 1, Item 1) and continue retracting support leg until wheel (Figure 1, Item 5) is off ground.
3. Remove self-tapping screw (Figure 1, Item 6) from pivot of front support leg (Figure 1, Item 4) and remove pin assembly (Figure 1, Item 3) and front support leg from frame. Discard self-tapping screw.

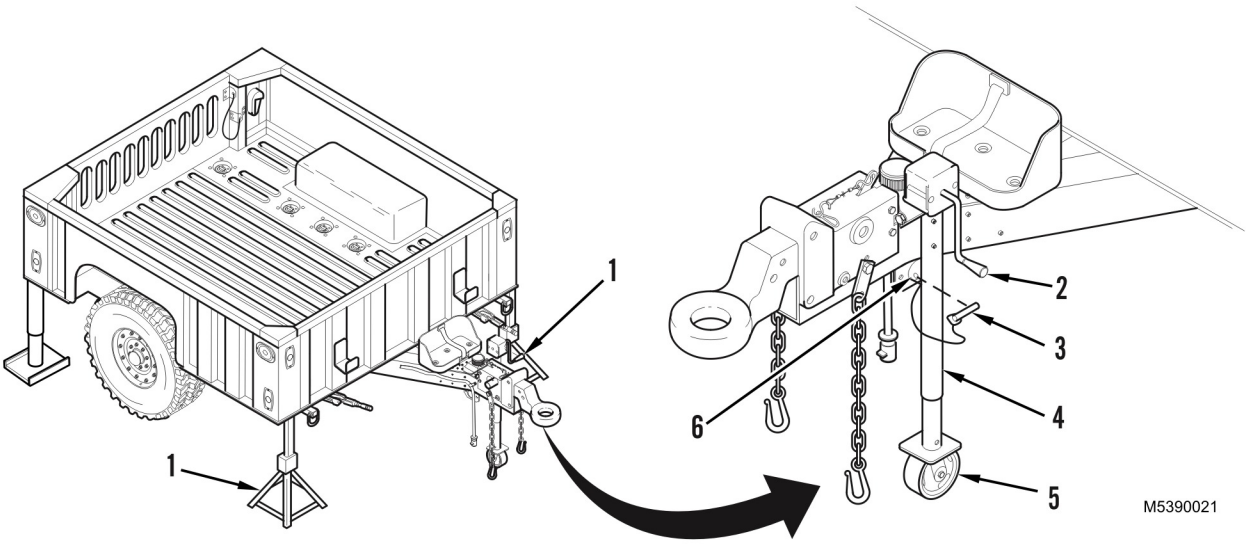

Figure 1. Front Support Leg Removal.

END OF TASK

CASTER REMOVAL

NOTE

- Any other configuration of casters on landing leg will require ordering a complete landing leg when it needs repair.
- The caster has two different configurations. Procedures to remove both are shown.

Caster (With Bolts and Nuts) Removal

Remove four locknuts (Figure 2, Item 4), washers (Figure 2, Item 3), bolts (Figure 2, Item 2), and caster (Figure 2, Item 5) from front support leg (Figure 2, Item 1). Discard locknuts.

Caster (With Lockpin) Removal

Remove lockpin (Figure 2, Item 7) and caster (Figure 2, Item 8) from front support leg (Figure 2, Item 6).

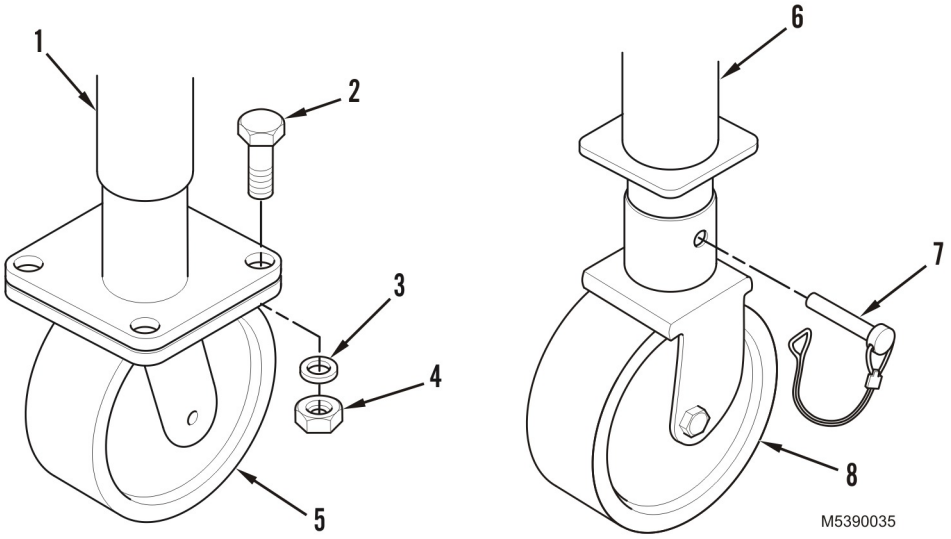

Figure 2. Caster Removal.

END OF TASK

CLEANING AND INSPECTION

WARNING

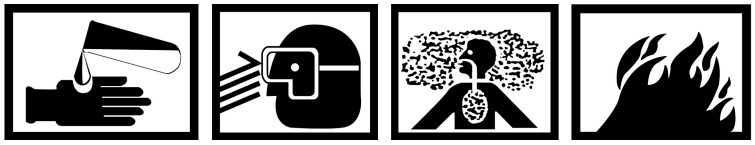

- **Solvent cleaning compound MIL-PRF-680 may be irritating to the eyes and skin. Wear protective gloves and goggles. First aid for skin contact: remove contaminated clothing. Wash skin thoroughly with soap and water. First aid for eye contact: flush with water for 15 minutes or until irritation subsides. If symptoms persist, seek medical attention. Failure to comply may result in personnel death or injury. Seek medical attention in event of injury.**
- **Use solvent cleaning compound MIL-PRF-680 in a well-ventilated area. Use respirator as needed. Accidental ingestion can cause irritation of digestive tract and respiratory tract. May cause lung and central nervous system damage. Can be fatal if swallowed. Inhalation of high/massive concentrations can cause coma or be fatal. First aid for ingestion: DO NOT induce vomiting. Seek immediate medical attention. First aid for inhalation: move to fresh air. If not breathing, provide artificial respiration. If symptoms persist, seek medical attention. Failure to comply may result in personnel death or injury. Seek medical attention in event of injury.**
- **MIL-PRF-680 solvent is combustible; DO NOT use or store near heat, sparks, flame, or other ignition sources. Use mechanical ventilation whenever product is used in a confined space, heated above ambient temperatures, or agitated. Keep container sealed when not in use. Failure to comply may result in personnel death or injury. Seek medical attention in event of injury.**
- **Improper cleaning methods and use of unauthorized cleaning liquids or solvents can injure personnel and damage equipment. Failure to comply may result in personnel death or injury. Seek medical attention in event of injury.**
- **Cloths or rags saturated with solvent cleaning compound must be disposed of in accordance with authorized facility procedures. Failure to comply may result in personnel death or injury. Seek medical attention in event of injury.**

1. Clean all removed components with cleaning solvent (WP 0095, Table 1, Item 6), and allow to dry.
2. Inspect all components including gears for wear, cracks, broken welds, corrosion, or other damage. Replace front support leg if damage is evident.
3. Apply GAA to gears (WP 0064).

END OF TASK

PIVOT REMOVAL

1. Remove two locknuts (Figure 3, Item 6), washers (Figure 3, Item 5), and capscrews (Figure 3, Item 4) securing pivot (Figure 3, Item 3) to near side of pivot bracket (Figure 3, Item 2). Discard locknuts.
2. Remove capscrew (Figure 3, Item 1) and lockwasher (Figure 3, Item 7) securing pivot (Figure 3, Item 3) to pivot bracket (Figure 3, Item 2). Discard lockwasher.
3. Remove pivot (Figure 3, Item 3) from pivot bracket (Figure 3, Item 2).

END OF TASK

PIVOT INSTALLATION

1. Install pivot (Figure 3, Item 3) onto pivot bracket (Figure 3, Item 2) and secure with capscrew (Figure 3, Item 1) and new lockwasher (Figure 3, Item 7).
2. Install two capscrews (Figure 3, Item 4), washers (Figure 3, Item 5), and new locknuts (Figure 3, Item 6).

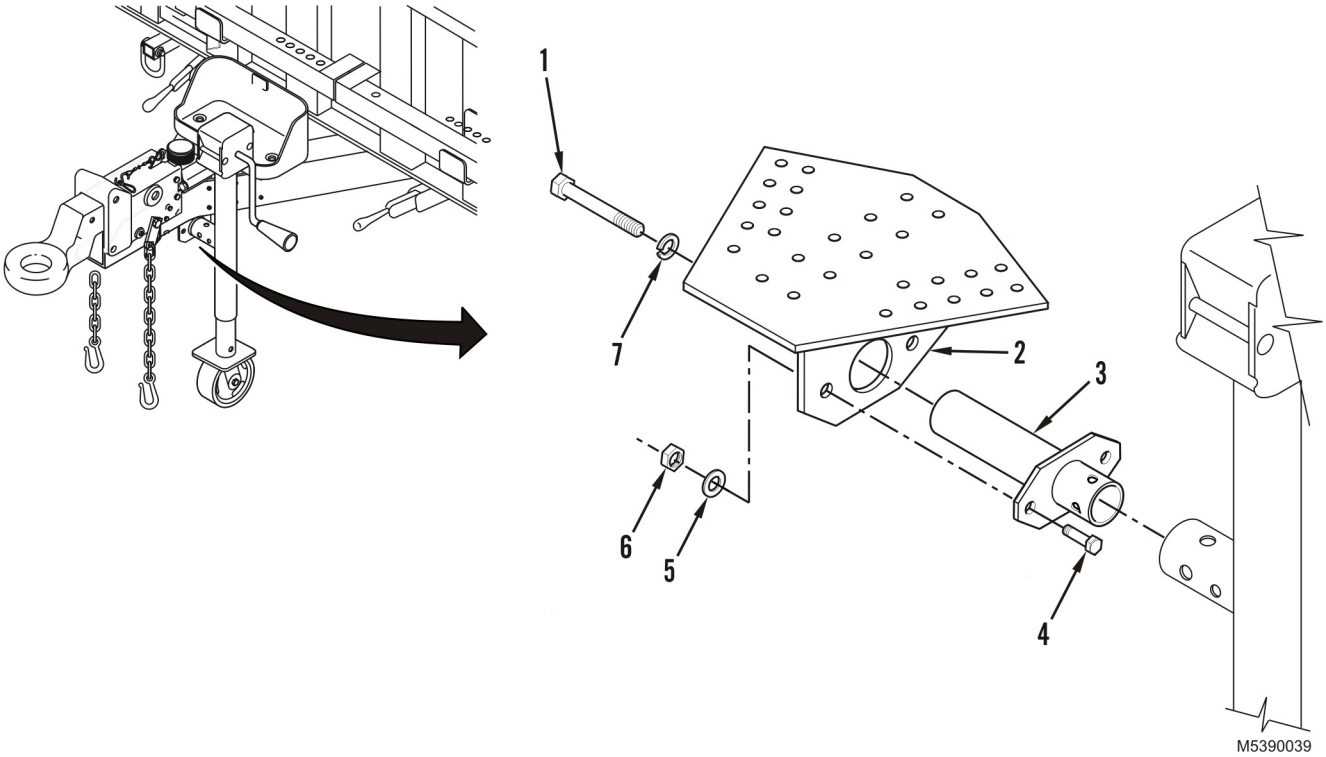

Figure 3. Pivot Removal and Installation.

END OF TASK

CASTER INSTALLATION

NOTE

The caster has two different configurations. Procedures to install both are shown.

Caster (With Bolts and Nuts) Installation

Install caster (Figure 4, Item 5), four bolts (Figure 4, Item 2), washers (Figure 4, Item 3), and new locknuts (Figure 4, Item 4) on front support leg (Figure 4, Item 1).

Caster (With Lockpin) Installation

Install caster (Figure 4, Item 8) and lockpin (Figure 4, Item 7) to front support leg (Figure 4, Item 6).

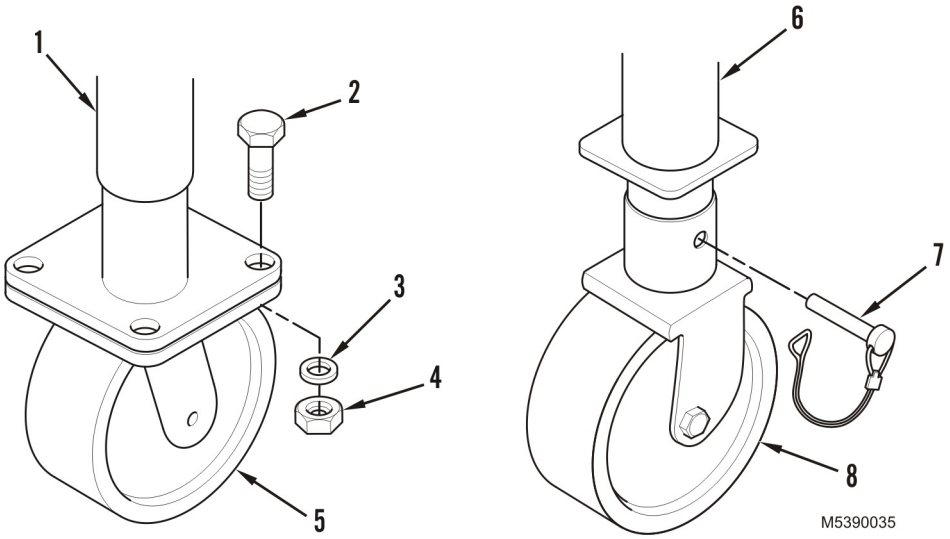

Figure 4. Caster Installation.

END OF TASK

FRONT SUPPORT LEG INSTALLATION

1. Position front support leg (Figure 5, Item 4) on frame (with front support leg in down position) and install pin assembly (Figure 5, Item 3) on frame and new self-tapping screw (Figure 5, Item 6) on pivot of front support leg.
2. Using front support leg handle (Figure 5, Item 2), raise trailer until jack stands (Figure 5, Item 1) can be removed from under trailer.
3. Remove jack stands (Figure 5, Item 1).

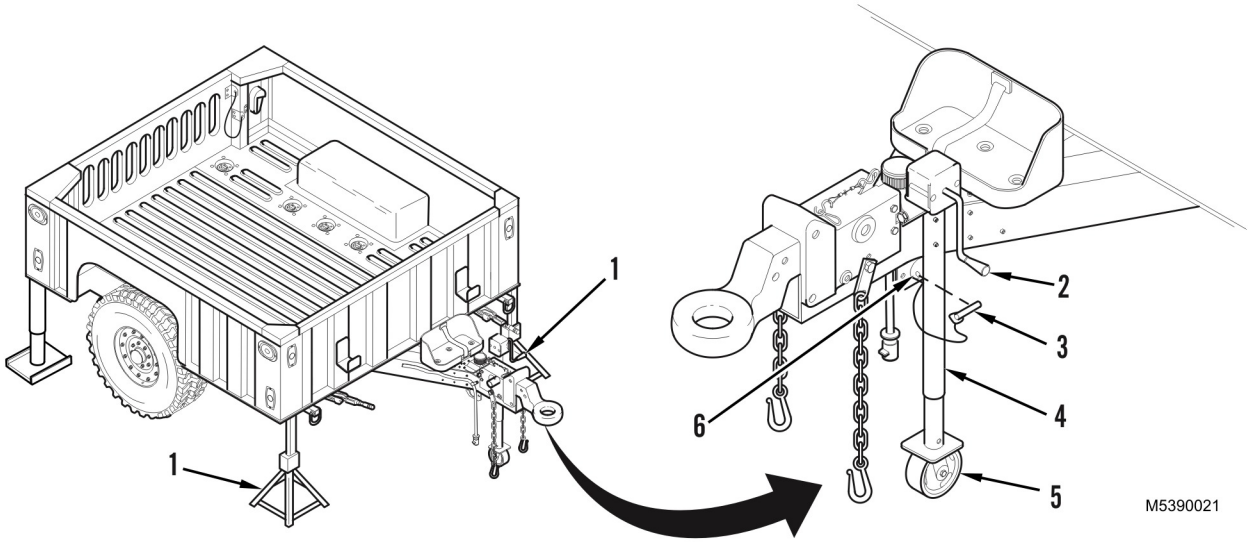

Figure 5. Front Support Leg Installation.

END OF TASK

FOLLOW-ON MAINTENANCE

1. Check for smooth operation of landing leg.
2. Remove rear stabilizers.

END OF TASK

END OF WORK PACKAGE

FIELD MAINTENANCE
SHOCK ABSORBER MAINTENANCE

INITIAL SETUP:

Tools and Special Tools
- Tool Kit, General Mechanic's (WP 0096, Table 1, Item 1)
- Wrench, Torque: 1/2-in. drive, 30-250 lb-ft (WP 0096, Table 1, Item 14)

Materials/Parts
- Antiseize Compound (WP 0095, Table 1, Item 1)
- Cotter Pin Qty: 2 (WP 0082, Figure 14, Item 9)
- Locknut Qty: 2 (WP 0082, Figure 14, Item 2)

Equipment Condition
- Parked on level surface
- Wheels chocked (WP 0005)
- Handbrake applied
- Intervehicular cable disconnected from towing vehicle (WP 0005)

SHOCK ABSORBER REMOVAL

NOTE

Both shock absorbers are removed in the same manner.

1. Remove upper shock absorber cotter pin (Figure 1, Item 2), slotted nut (Figure 1, Item 3), flat washer (Figure 1, Item 4), and bolt (Figure 1, Item 1). Discard cotter pin.
2. Inspect shock absorber mounting bolt (Figure 1, Item 1) for damage. Replace if defective.
3. Remove bottom shock absorber cotter pin (Figure 1, Item 2), slotted nut (Figure 1, Item 3), and flat washer (Figure 1, Item 4). Discard cotter pin.

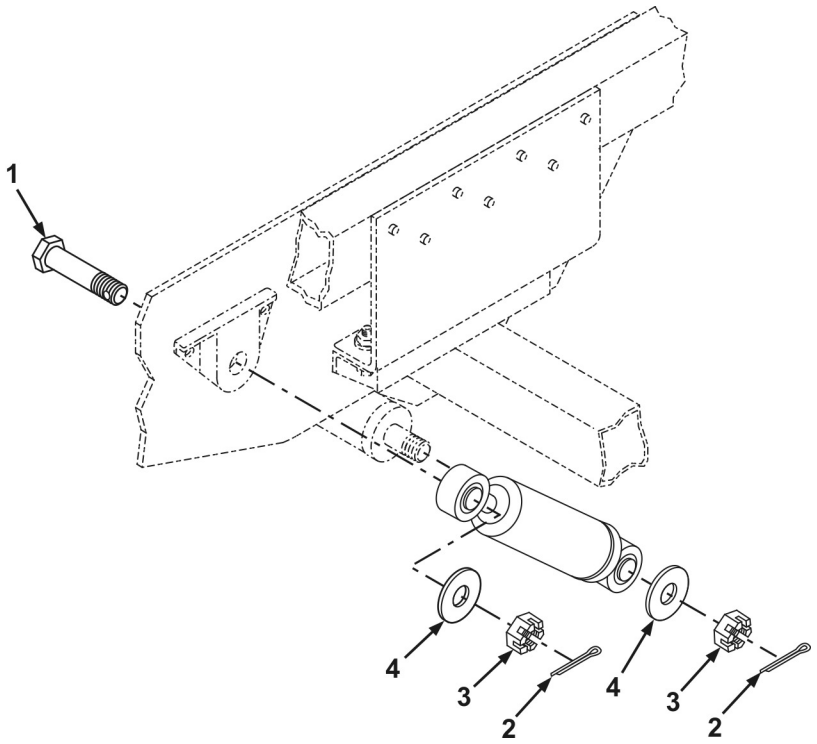

Figure 1. Shock Absorber Disassembly.

4. Remove capscrew (Figure 2, Item 3) from clamp (Figure 2, Item 2) securing flex brake line (Figure 2, Item 5) to torsion arm (Figure 2, Item 4).
5. Remove shock absorber (Figure 2, Item 1).

SHOCK ABSORBER REMOVAL - Continued

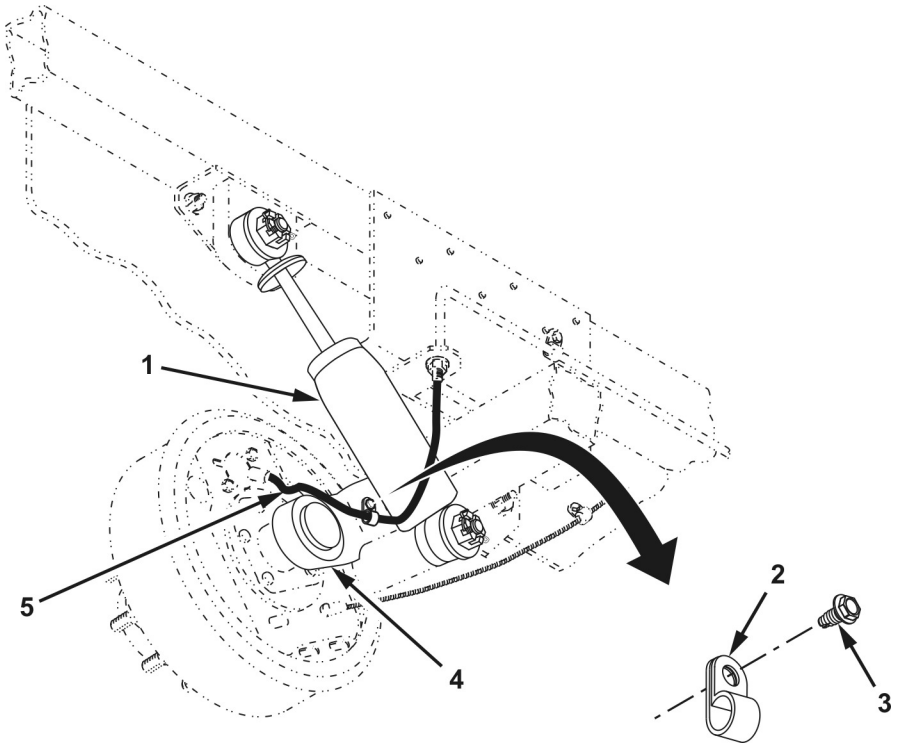

Figure 2. Shock Absorber Removal.

END OF TASK

SHOCK ABSORBER MOUNT BRACKET REMOVAL

NOTE

Both shock absorber mount brackets are removed in the same manner.

1. Remove two locknuts (Figure 3, Item 1), four flat washers (Figure 3, Item 2), and two capscrews (Figure 3, Item 4) securing shock absorber mount bracket (Figure 3, Item 3) to frame. Discard locknuts.
2. Remove shock absorber mount bracket (Figure 3, Item 3) from frame.

END OF TASK

SHOCK ABSORBER MOUNT BRACKET INSTALLATION

NOTE

Both shock absorber mount brackets are installed in the same manner.

1. Install shock absorber mount bracket (Figure 3, Item 3) on frame.
2. Install two capscrews (Figure 3, Item 4), four flat washers (Figure 3, Item 2), and two new locknuts (Figure 3, Item 1) securing shock absorber mount bracket (Figure 3, Item 3) to frame. Tighten locknuts and torque to 72 lb-ft (98 N•m).

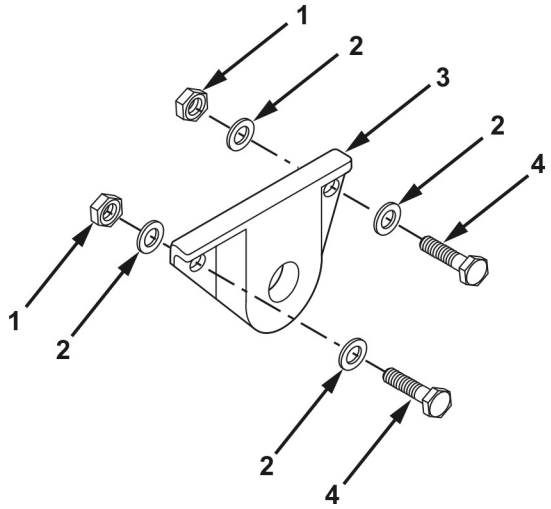

Figure 3. Shock Absorber Mount Bracket Removal and Installation.

END OF TASK

SHOCK ABSORBER INSTALLATION

NOTE

- Both shock absorbers are installed in the same manner.
- Shock absorber rod is positioned at top end of shock absorber.
- Antiseize compound must be applied to threads before starting nuts.

1. Install shock absorber (Figure 4, Item 5) to torsion arm mount (Figure 4, Item 6) and top mounting bracket (Figure 4, Item 7).

SHOCK ABSORBER INSTALLATION - Continued

2. Install washer (Figure 4, Item 4) and slotted nut (Figure 4, Item 3) to torsion arm mount (Figure 4, Item 6), securing shock absorber (Figure 4, Item 5). Tighten nut and torque to 185 lb-ft (251 N•m), ensuring slotted nut and hole in torsion arm mount align. Install new cotter pin (Figure 4, Item 2).
3. Install mounting bolt (Figure 4, Item 1) through top mounting bracket (Figure 4, Item 7) and upper shock absorber (Figure 4, Item 5) mounting ring.
4. Install washer (Figure 4, Item 4) and slotted nut (Figure 4, Item 3) to frame mounting bolt (Figure 4, Item 1), securing shock absorber (Figure 4, Item 5). Tighten nut and torque to 185 lb-ft (251 N•m), ensuring slotted nut and hole in frame mounting bolt (Figure 4, Item 1) align. Install new cotter pin (Figure 4, Item 2).

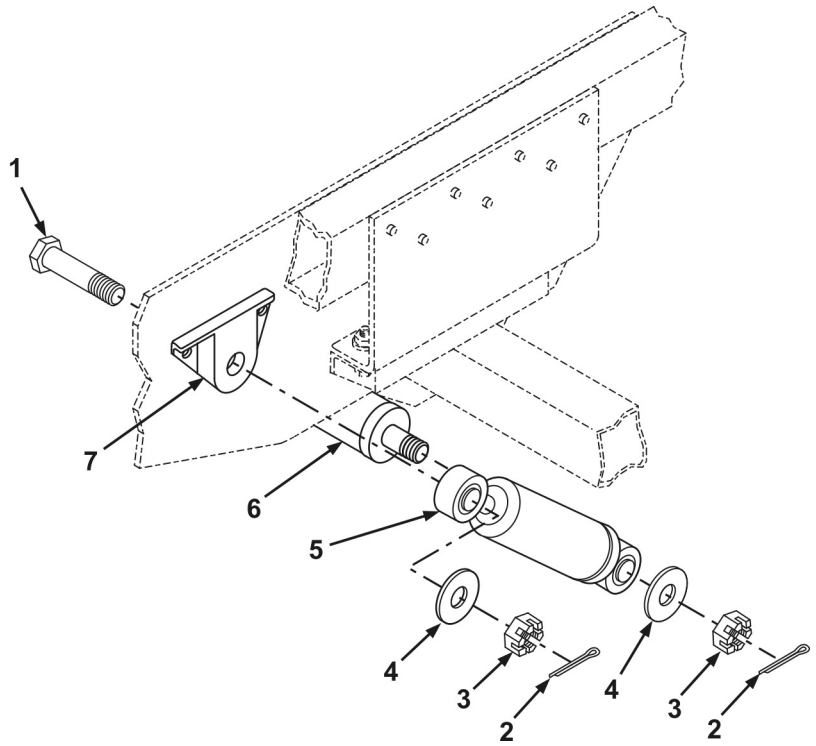

Figure 4. Shock Absorber Assembly.

SHOCK ABSORBER INSTALLATION - Continued

5. Install capscrew (Figure 5, Item 3) through clamp (Figure 5, Item 2), securing flex brake line (Figure 5, Item1) to torsion arm (Figure 5, Item 4).

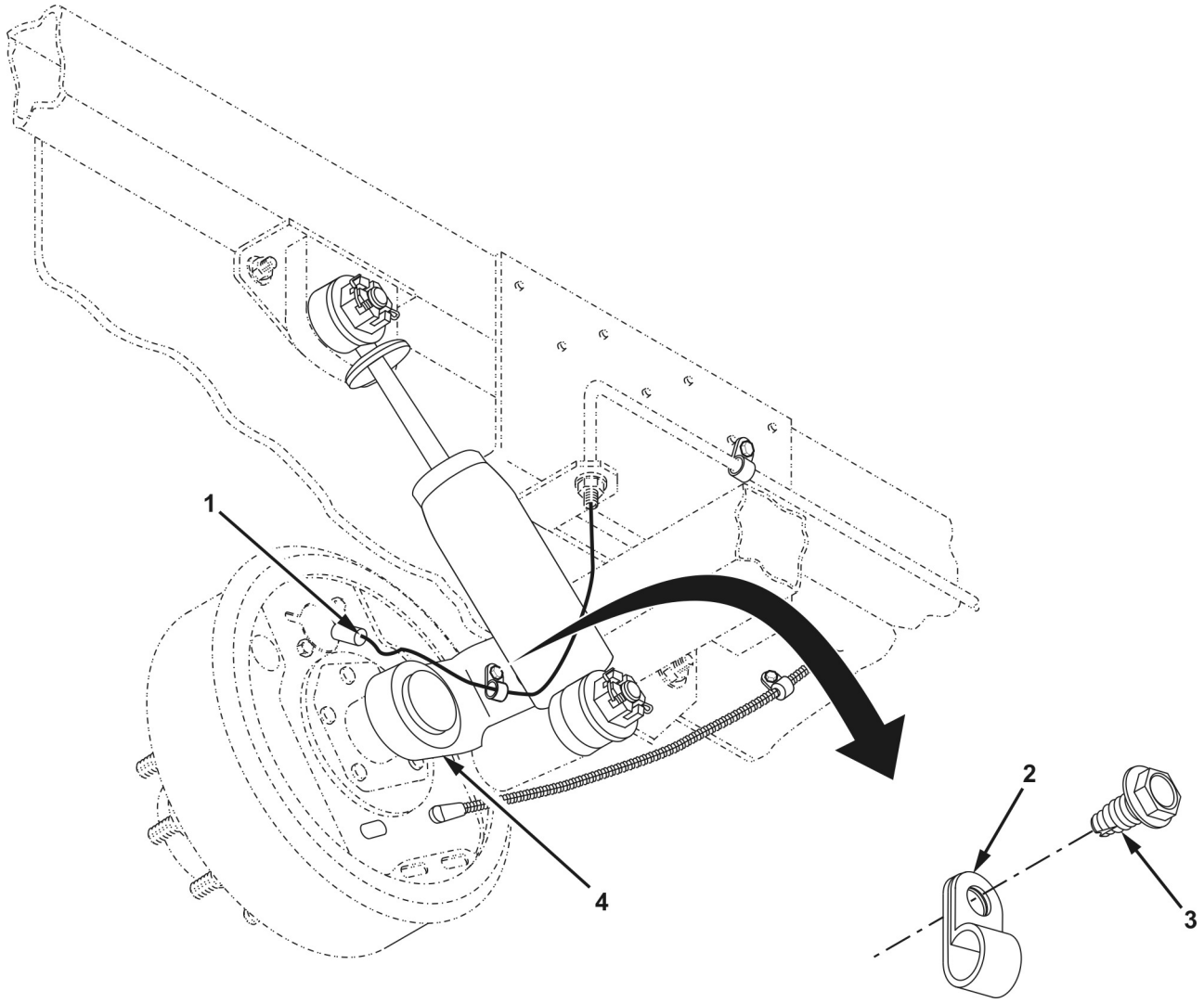

Figure 5. Shock Absorber Installation.

END OF TASK

END OF WORK PACKAGE

FIELD MAINTENANCE
TAILGATE REPLACEMENT

INITIAL SETUP:

Tools and Special Tools
Tool Kit, General Mechanic's (WP 0096, Table 1, Item 1)

Personnel Required
(2)

Equipment Condition
Parked on level surface
Wheels chocked (WP 0005)
Handbrake applied

WARNING

- **Tailgate is heavy – weighs approximately 75 lb (34 kg). Use caution while removing or installing tailgate as it may fall. Failure to comply may result in serious injury to personnel or damage to equipment. Seek medical attention in event of injury.**
- **Keep hands and fingers clear of hinges while removing or installing the tailgate. Failure to comply may result in serious injury to personnel. Seek medical attention in event of injury.**

REMOVAL

1. Remove two pins (Figure 1, Item 1) from latch assemblies (Figure 1, Item 2) securing tailgate (Figure 1, Item 6) to cargo body (Figure 1, Item 3). Release latches.
2. Lower tailgate (Figure 1, Item 6) until supported by two lanyards (Figure 1, Item 5).
3. Remove two lanyards (Figure 1, Item 5) from cargo body mounting bosses (Figure 1, Item 4).
4. Remove tailgate (Figure 1, Item 6) by lowering to 25 degrees and lifting tailgate off hinges (Figure 1, Item 7).

END OF TASK

INSTALLATION

1. Install tailgate (Figure 1, Item 6) on tailgate hinges (Figure 1, Item 7) by tilting tailgate to 25 degrees and lowering tailgate onto hinges.
2. Fasten two lanyards (Figure 1, Item 5) on cargo body mounting bosses (Figure 1, Item 4).
3. Raise tailgate (Figure 1, Item 6), close latches (Figure 1, Item 2), and install one pin (Figure 1, Item 1) into each latch assembly.

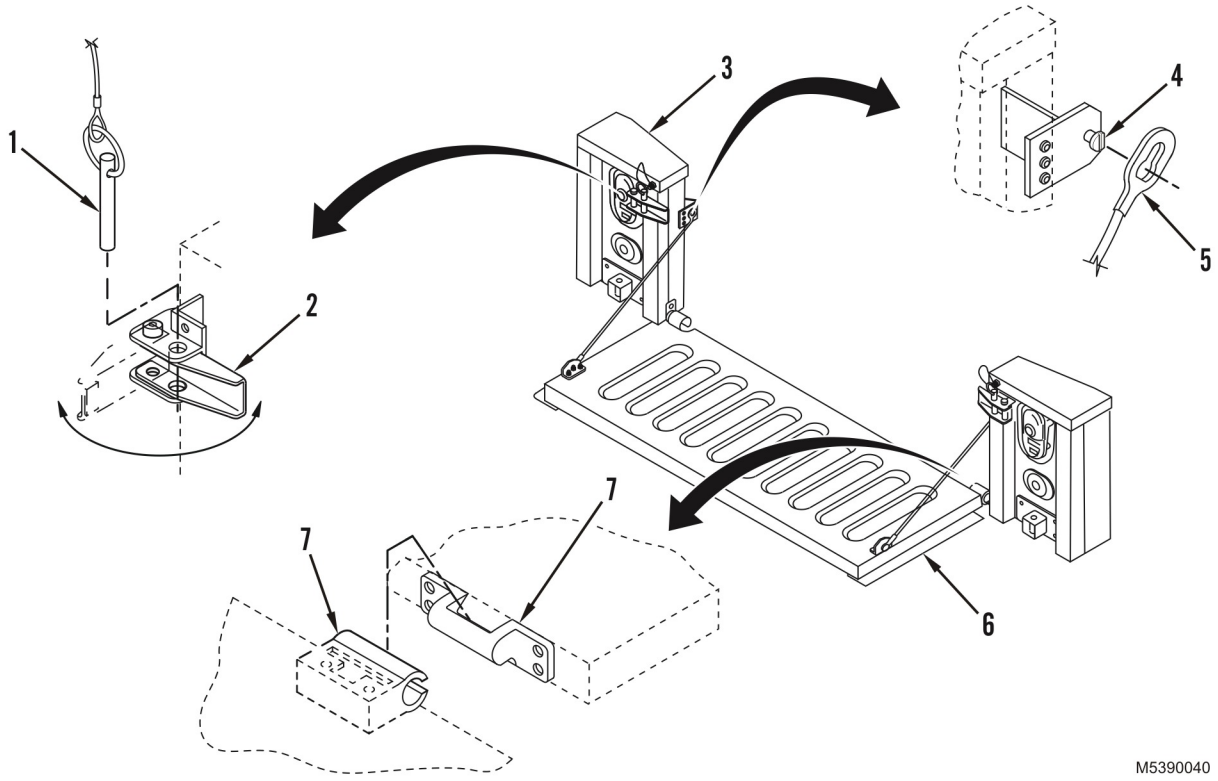

Figure 1. Tailgate Removal and Installation.

END OF TASK

END OF WORK PACKAGE

FIELD MAINTENANCE
TAILGATE LANYARD AND MOUNT REPLACEMENT

INITIAL SETUP:

Tools and Special Tools
Tool Kit, General Mechanic's (WP 0096, Table 1, Item 1)
Tool Kit, Blind Riveter (WP 0096, Table 1, Item 12)

Materials/Parts
Locknut (WP 0083, Figure 15, Item 12)
Rivet Qty: 3 (WP 0083, Figure 15, Item 7)

Equipment Condition
Parked on level surface
Wheels chocked (WP 0005)
Handbrake applied

WARNING

Tailgate is heavy – weighs approximately 75 lb (34 kg). Use caution while removing or installing tailgate lanyards as the tailgate may fall. Failure to comply may result in serious injury to personnel or damage to equipment. Seek medical attention in event of injury.

NOTE

Tailgate mounting hardware replacement procedures are the same for both sides.

REMOVAL

1. Remove locknut (Figure 1, Item 4), shoulder screw (Figure 1, Item 1), two washers (Figure 1, Item 3), and lanyard end (Figure 1, Item 7) from tailgate lanyard mount (Figure 1, Item 6). Discard locknut.
2. Remove three rivets (Figure 1, Item 2) securing tailgate lanyard mount (Figure 1, Item 6) to tailgate (Figure 1, Item 5). Remove lanyard mount. Discard rivets.

END OF TASK

INSTALLATION

1. Install three rivets (Figure 1, Item 2) securing tailgate lanyard mount (Figure 1, Item 6) to tailgate (Figure 1, Item 5).
2. Install shoulder screw (Figure 1, Item 1), two washers (Figure 1, Item 3), new locknut (Figure 1, Item 4), and end (Figure 1, Item 7) of lanyard to tailgate lanyard mount (Figure 1, Item 6).

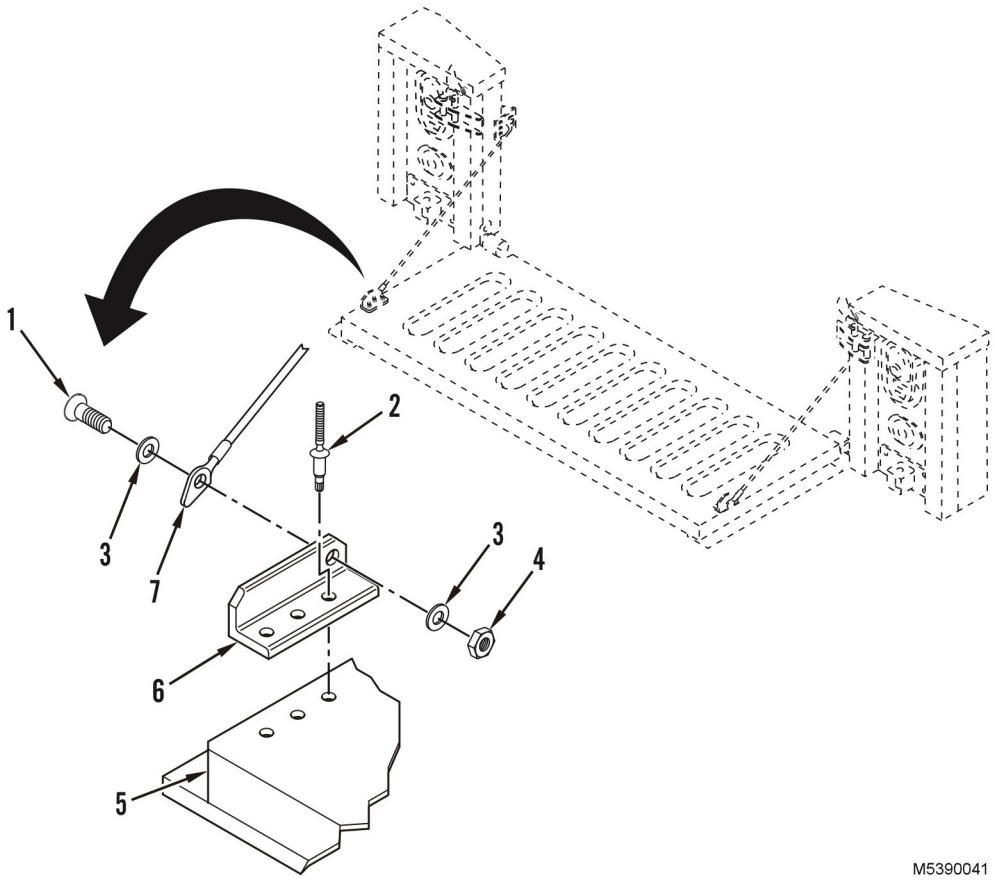

Figure 1. Tailgate Lanyard and Mount Removal and Installation.

END OF TASK

END OF WORK PACKAGE

FIELD MAINTENANCE
TAILGATE LATCH ASSEMBLY, LATCH ASSEMBLY PIN, AND LATCHING PIN LANYARD REPLACEMENT

INITIAL SETUP:

Tools and Special Tools
Tool Kit, General Mechanic's (WP 0096, Table 1, Item 1)
Tool Kit, Blind Riveter (WP 0096, Table 1, Item 12)

Materials/Parts
Locknut Qty: 2 (WP 0083, Figure 15, Item 19)

Materials/Parts (cont.)
Rivet Qty: 4 (WP 0083, Figure 15, Item 20)
Rivet Qty: 2 (WP 0083, Figure 15, Item 26)

Equipment Condition
Parked on level surface
Wheels chocked (WP 0005)
Handbrake applied

TAILGATE LATCH ASSEMBLY REPLACEMENT

REMOVAL

1. Remove tailgate latch pin (Figure 1, Item 3) with retaining ring (Figure 1, Item 2) and lanyard (Figure 1, Item 1).
2. Remove four rivets (Figure 1, Item 9) securing tailgate latch (Figure 1, Item 6) to cargo body (Figure 1, Item 5). Discard rivets.
3. Remove tailgate latch (Figure 1, Item 6) from cargo body (Figure 1, Item 5).

END OF TASK

INSTALLATION

1. Install four new rivets (Figure 1, Item 9) securing tailgate latch (Figure 1, Item 6) to cargo body (Figure 1, Item 5).
2. Install tailgate latch pin (Figure 1, Item 3) into latch assembly (Figure 1, Item 6).

END OF TASK

TAILGATE LATCH ASSEMBLY PIN REPLACEMENT

REMOVAL

1. Remove locknut (Figure 1, Item 8), flat washer (Figure 1, Item 7), and screw (Figure 1, Item 4) securing tailgate latch (Figure 1, Item 11) to cargo body latch assembly (Figure 1, Item 6). Discard locknut. Check screw for damage. Replace if defective.
2. Remove tailgate latch (Figure 1, Item 11) and flat washers (Figure 1, Item 10). Check tailgate latch for damage.
3. Remove two rivets (Figure 1, Item 12) and pad (Figure 1, Item 13) from tailgate latch (Figure 1, Item 11). Discard rivets.

END OF TASK

INSTALLATION

1. Install two rivets (Figure 1, Item 12) and pad (Figure 1, Item 13) on tailgate latch (Figure 1, Item 11).
2. Install tailgate latch (Figure 1, Item 11) and two flat washers (Figure 1, Item 10) into tailgate latch assembly (Figure 1, Item 6).
3. Install screw (Figure 1, Item 4), flat washer (Figure 1, Item 7), and new locknut (Figure 1, Item 8). Tighten locknut, allowing latch (Figure 1, Item 11) to move freely.

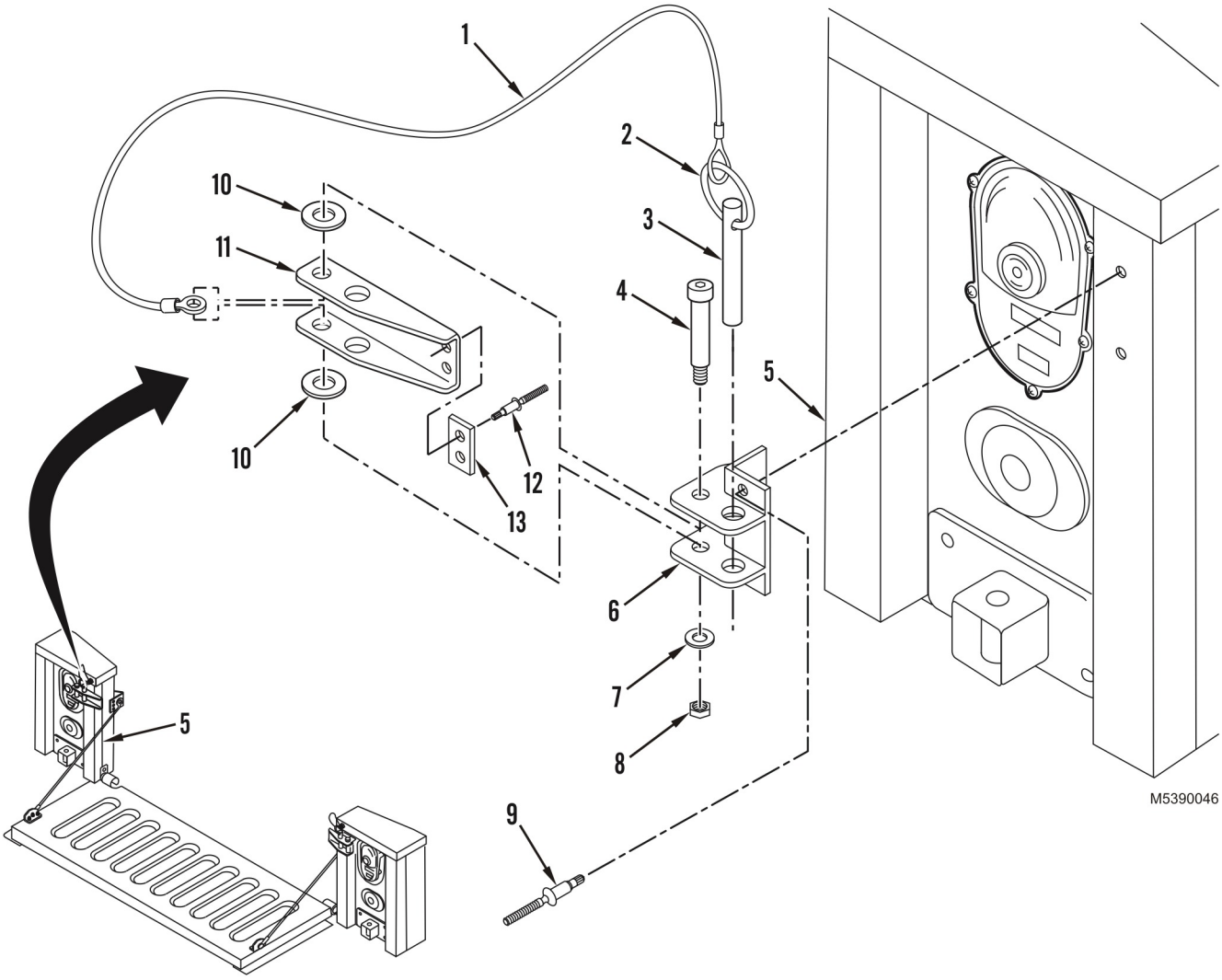

Figure 1. Tailgate Latch Assembly and Latch Assembly Pin Removal and Installation.

END OF TASK

TAILGATE LATCHING PIN LANYARD REPLACEMENT

REMOVAL

1. Remove locknut (Figure 2, Item 4) and flat washer (Figure 2, Item 3) from screw (Figure 2, Item 2). Discard locknut.
2. Remove screw (Figure 2, Item 2) far enough to remove lanyard end (Figure 2, Item 1).

END OF TASK

INSTALLATION

1. Install lanyard end (Figure 2, Item 1) onto screw (Figure 2, Item 2).
2. Install screw (Figure 2, Item 2), flat washer (Figure 2, Item 3), and new locknut (Figure 2, Item 4).

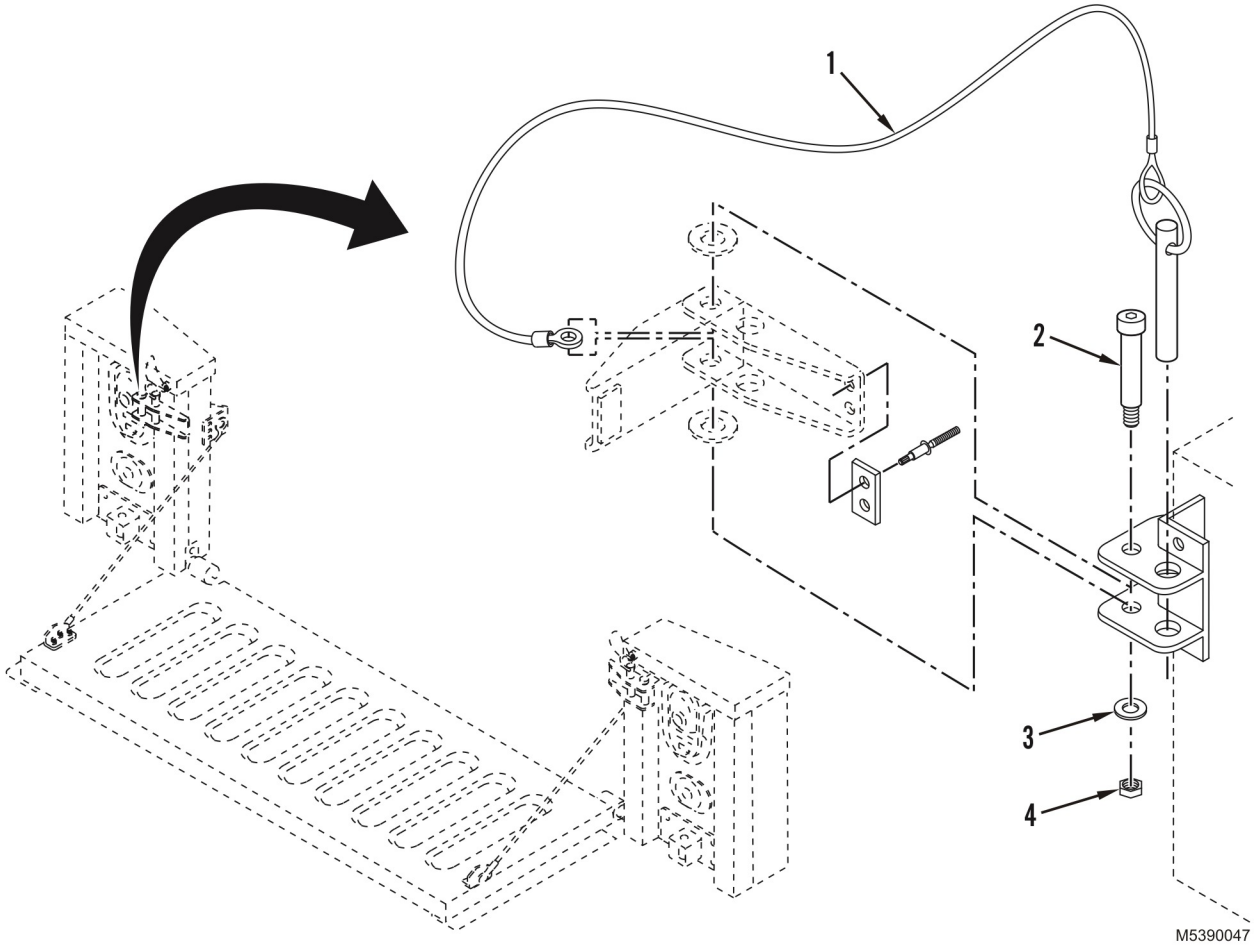

Figure 2. Tailgate Latching Pin Lanyard Removal and Installation.

END OF TASK

END OF WORK PACKAGE

FIELD MAINTENANCE
CARGO TIEDOWN REPLACEMENT

INITIAL SETUP:

Tools and Special Tools
Tool Kit, General Mechanic's (WP 0096, Table 1, Item 1)
Tool Kit, Blind Riveter (WP 0096, Table 1, Item 12)

Personnel Required
(2)

Materials/Parts
Rivet Qty: 4 (WP 0083, Figure 15, Item 35)

NOTE

Cargo tiedown replacement procedure is the same for all 12 cargo tiedowns.

REMOVAL

1. Remove four rivets (Figure 1, Item 2) securing cargo tiedown (Figure 1, Item 3) to underside of cargo body (Figure 1, Item 1). Discard rivets.
2. Remove cargo tiedown (Figure 1, Item 3) from cargo body (Figure 1, Item 1).

END OF TASK

INSTALLATION

CAUTION

Cargo tiedowns are installed by securing to underside of body. Failure to comply may result in equipment damage.

1. Position cargo tiedown (Figure 1, Item 3) on underside of cargo body (Figure 1, Item 1), and align mounting holes.
2. Install four new rivets (Figure 1, Item 2) securing cargo tiedown (Figure 1, Item 3) to cargo body (Figure 1, Item 1).

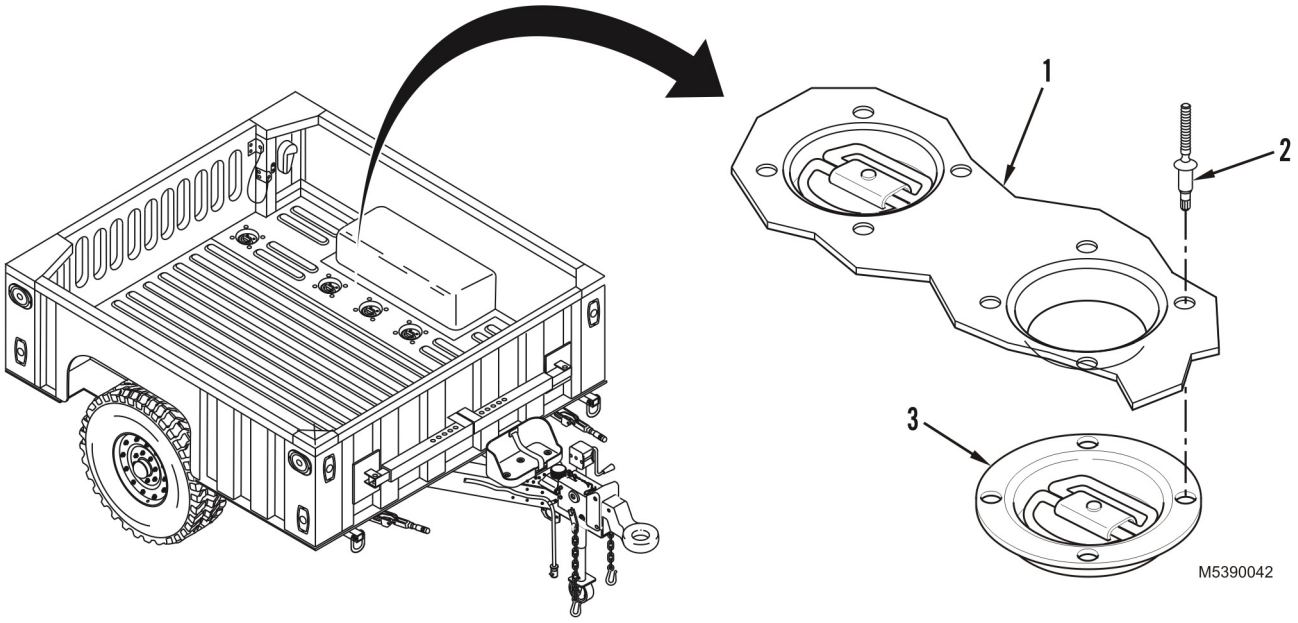

Figure 1. Cargo Tiedown Removal and Installation.

END OF TASK

END OF WORK PACKAGE

FIELD MAINTENANCE
SHACKLE REPLACEMENT

INITIAL SETUP:

Tools and Special Tools
Tool Kit, General Mechanic's (WP 0096, Table 1, Item 1)

Materials/Parts
Cotter Pin Qty: 3 (WP 0083, Figure 15, Item 38)

NOTE

- This procedure applies to one shackle. All others replaced the same.
- Nuts may be tack welded to the bolts, so the removal process may require additional tools. New bolts, nuts, and cotter pins may need to be ordered.

REMOVAL

Remove cotter pin (Figure 1, Item 1), slotted nut (Figure 1, Item 2), and capscrew (Figure 1, Item 4) securing shackle (Figure 1, Item 5) to frame (Figure 1, Item 3). Discard cotter pin.

END OF TASK

INSTALLATION

1. Install shackle (Figure 1, Item 5) on frame (Figure 1, Item 3).
2. Install capscrew (Figure 1, Item 4) and slotted nut (Figure 1, Item 2). Tighten slotted nut until slight binding occurs during shackle (Figure 1, Item 5) movement.
3. Install new cotter pin (Figure 1, Item 1).

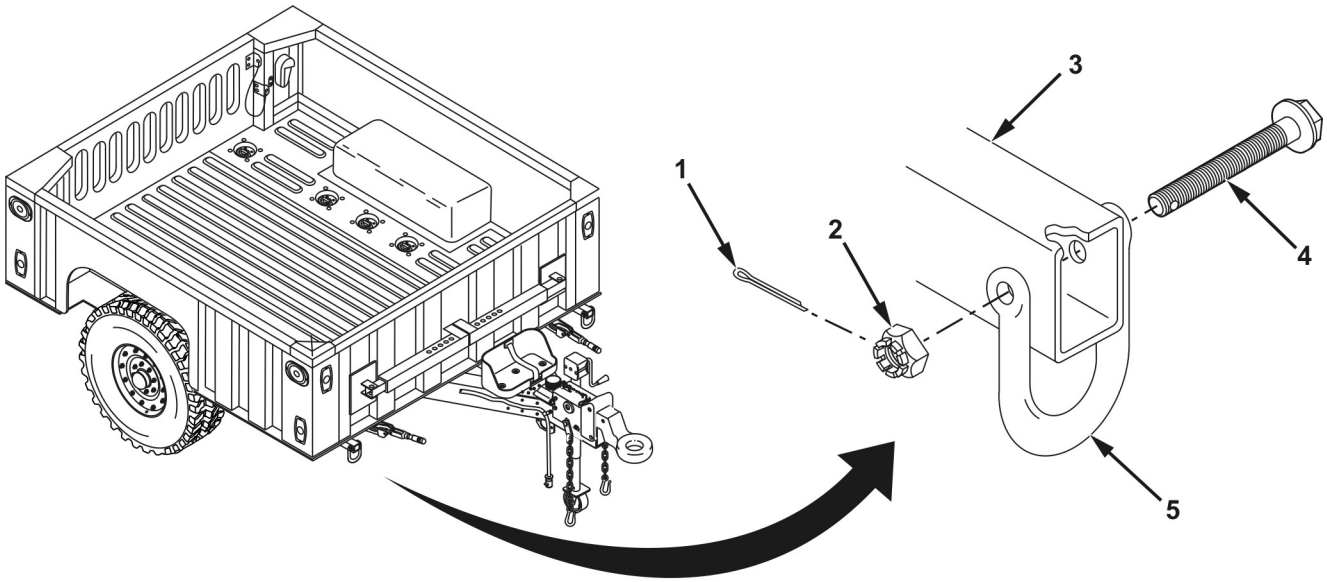

Figure 1. Shackle Removal and Installation.

END OF TASK

END OF WORK PACKAGE

FIELD MAINTENANCE
TAILGATE HINGE AND SHIM REPLACEMENT

INITIAL SETUP:

Tools and Special Tools
Tool Kit, General Mechanic's (WP 0096, Table 1, Item 1)
Wrench, Torque: 3/8-in. drive, 0-300 lb-in. (WP 0096, Table 1, Item 15)

Materials/Parts
Locknut Qty: 2 (WP 0083, Figure 15, Item 5)
Rivet Qty: 6 (WP 0083, Figure 15, Item 22)

Equipment Condition
Tailgate removed (WP 0051)

REMOVAL

1. Remove two locknuts (Figure 1, Item 5), two washers (Figure 1, Item 6), and two capscrews (Figure 1, Item 7) securing female tailgate hinge (Figure 1, Item 8) to tailgate (Figure 1, Item 4). Discard locknuts.
2. Remove female tailgate hinge (Figure 1, Item 8) from tailgate (Figure 1, Item 4).
3. Remove four rivets (Figure 1, Item 3) securing male tailgate hinge (Figure 1, Item 2) to cargo body (Figure 1, Item 1). Discard rivets.
4. Remove male tailgate hinge (Figure 1, Item 2) from cargo body (Figure 1, Item 1).

END OF TASK

INSTALLATION

1. Install four new rivets (Figure 1, Item 3) securing male tailgate hinge (Figure 1, Item 2) to cargo body.
2. Install two capscrews (Figure 1, Item 7), two washers (Figure 1, Item 6), and two new locknuts (Figure 1, Item 5) securing female tailgate hinge (Figure 1, Item 8) to tailgate (Figure 1, Item 4).
3. Tighten capscrews (Figure 1, Item 7) and torque to 168 lb-in (19 N•m).

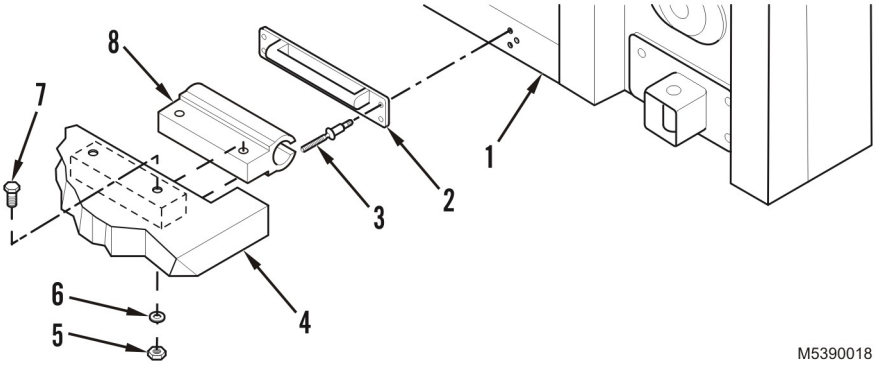

Figure 1. Tailgate Hinge Removal and Installation.

END OF TASK

FOLLOW-ON MAINTENANCE

Install tailgate (WP 0051).

END OF TASK

END OF WORK PACKAGE

FIELD MAINTENANCE
CARGO BODY MAINTENANCE

INITIAL SETUP:

Tools and Special Tools
Tool Kit, General Mechanic's (WP 0096, Table 1, Item 1)
Tool Kit, Blind Riveter (WP 0096, Table 1, Item 12)

Materials/Parts
Bolt Qty: A/R
Locknut Qty: A/R
Rivet Qty: A/R

References
WP 0062
WP 0095

Equipment Condition
Parked on level surface
Wheels chocked (WP 0005)
Handbrake applied

CAUTION

Repairs should not be made on the body using welding or heat for forming. Heat will only weaken material and cause further problems. Failure to comply may result in equipment damage.

MATERIAL

1. Use aluminum material for repair that is of the same alloy and temper as original, if possible. In general, 6061-T6 aluminum alloy should be used. Material thickness must be the same or thicker. This alloy will work well with flat repairs but is not well suited to bending because it is quite hard and cracks easily when bent sharply.
2. When bends must be made, use softer 6061-T4 aluminum alloy, and increase material thickness by at least 50 percent. As a general rule, 6061-T4 alloy should be bent with a minimum bend radius of one to two times material thickness, whereas 6061-T6 alloy requires at least three times material thickness radius for bends.
3. In all cases, closely inspect bends for cracks. A suitable method for avoiding cracks during bending is to obtain angles that are extruded from 6061-T6 alloy, or use preformed angles for repairs.

RIVET PATTERNS

1. Rivet patterns are denoted by rivet spacing and rivet edge distance. Rivet edge distance is the distance from center of rivet to nearest edge of sheet. Rivet spacing is defined as the distance from center of rivet to center of adjacent rivet.

RIVET PATTERNS - Continued

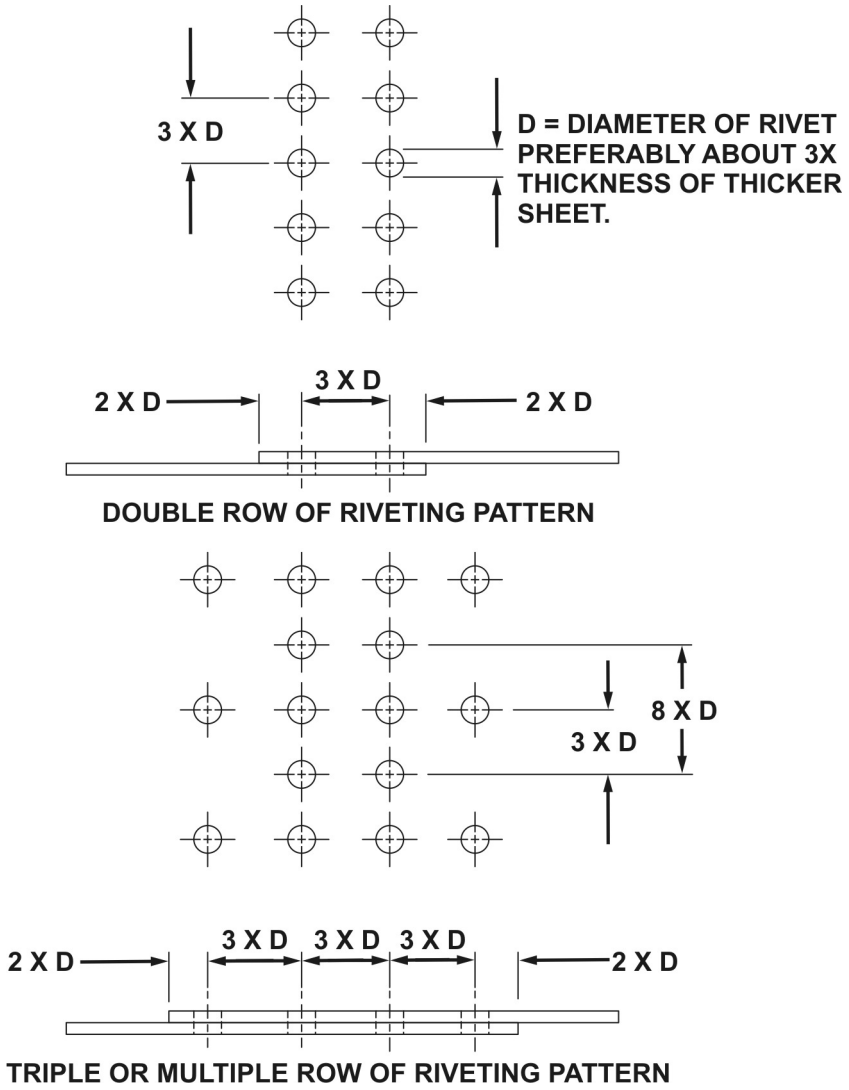

Figure 1. Rivet Pattern.

2. Required rivet spacing is determined by strength needed in the joint. You can get a general feel for strength by inspecting rivet patterns in surrounding areas. Make body repairs using single rows of rivets, with rivet spacing not greater than 1.5 in. (4 cm) and not less than 0.625 in. (16 mm). Use 1-in. (2.54 cm) rivet spacing as a general practice for repairs. Do not use rivet edge distances less than 0.375 in. (9.5 mm).

3. High-strength joints or large patches may require use of double or multiple rows of rivets to obtain sufficient strength.

RIVET PATTERNS - Continued

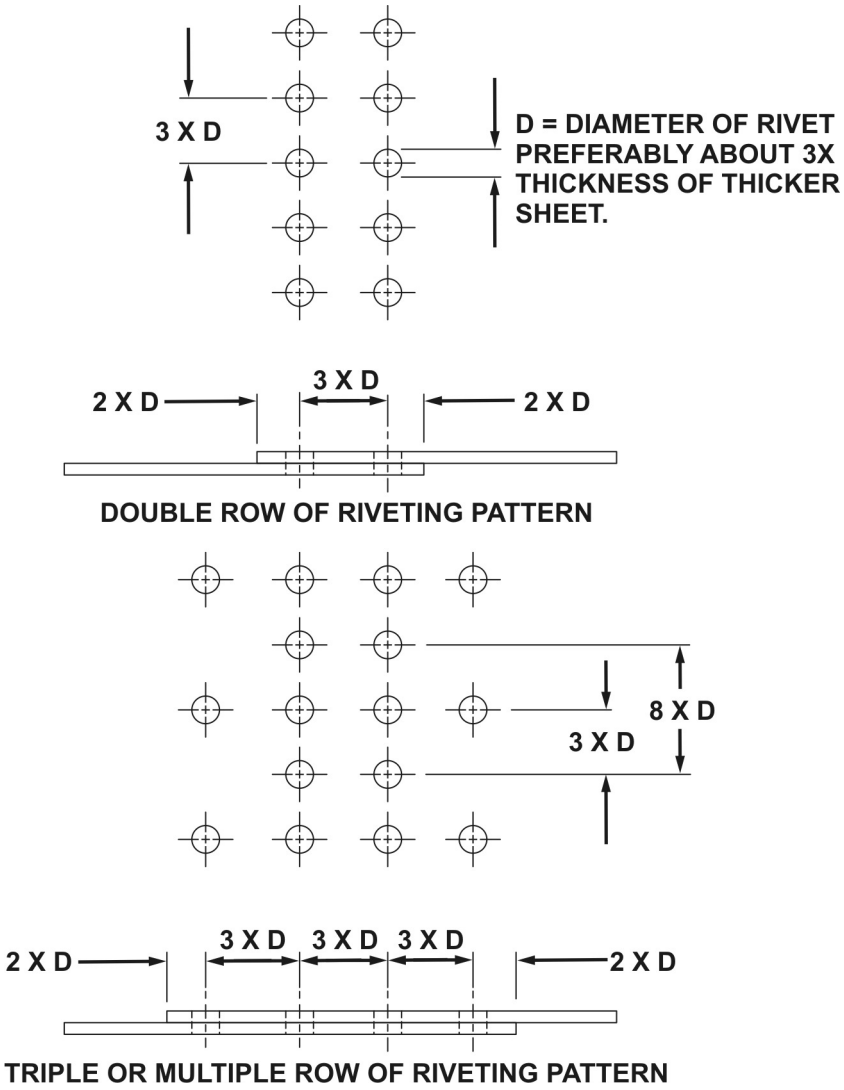

Figure 2. Rivet Spacing.

NOTE

To set rivet spacing, multiply the diameter of the rivet by the number shown.

4. Ensure rivet hole patterns are transferred accurately when a part with no holes is mated to one that already has rivet holes. Hole patterns must be transferred using one of the following methods:

   a. Lay a new part in place, and use holes in mating part as a drill template. This requires that new part be under the mating part. Do not distort original hole.

   b. Use removed part as a drill template by clamping the new and old parts together. This requires that parts nest flat and rivet flange be undistorted.

   c. For repair of huc rivets, punch damaged rivet out, and replace rivet with self-tapping screw.

JOINT DESIGN

1. Loads are applied through a joint to fasteners that hold the joint together. These loads are applied to fasteners in the form of shear loads or tension loads. If load is perpendicular to axis of fastener, the fastener is loaded in shear. If load is along axis of fastener, causing a pull on each end of fastener, the fastener is loaded in tension.
2. Rivets (Figure 3, Item 1) are designed to be loaded in shear. Do not create any new joints during repairs that cause rivets to be used in a tension application.

Figure 3. Rivet Loading.

3. Use bolts (Figure 4, Item 1) for tension applications, or substitute bolts for rivets in very high shear load applications.

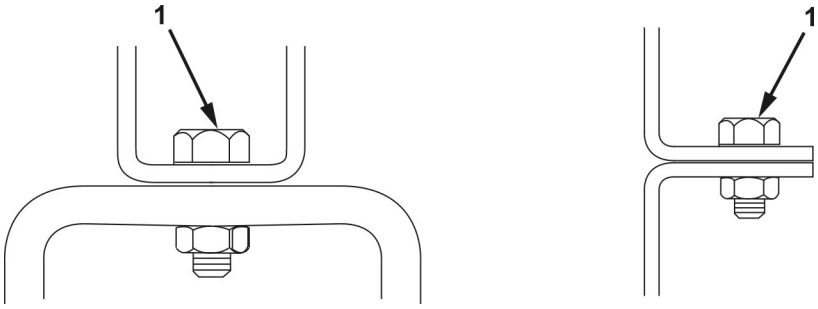

Figure 4. Bolts Replacing Rivets Loaded in Tension.

REPAIR PARTS PREPARATION

WARNING

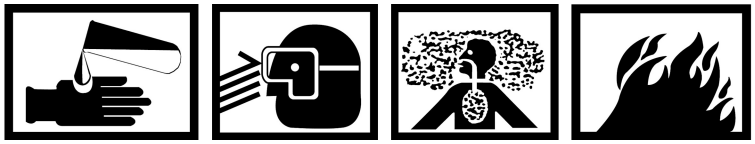

Adhesives and sealing compounds can burn easily, can give off harmful vapors, and are harmful to skin and clothing. Keep away from open fire, and use adhesives and sealing compounds in a well-ventilated area. If adhesive or sealing compound contacts skin or clothing, wash immediately with soap and water. Failure to comply may result in personnel illness or injury. Seek medical attention in event of injury.

REPAIR PARTS PREPARATION - Continued

WARNING

Accidental or intentional introduction of liquid contaminants into the environment is a violation of state, federal, and military regulations. Refer to Army Petroleum, Oils, and Lubricants (POL) for information concerning storage, use, and disposal of these liquids. Failure to comply may cause damage to environment and health of personnel. Seek medical attention in the event of an injury.

1. Paint repair parts or patches (WP 0062).
2. Install part as detailed in Repair by Patching (page 0057-6) or Repair by Insertion (page 0057-6).

REPAIR OF NEGLIGIBLE DAMAGE

1. Repair negligible cracks by drilling a small hole at each end of crack to stop crack propagation. This is called "stop-drilling." Table 1 gives proper drill sizes for "stop-drilling" cracks.
2. Repair negligible holes by rounding and smoothing edges of hole to alleviate stress risers caused by sharp notches.

CAUTION

Heat should never be used to reform parts because it greatly reduces part strength. Failure to comply may result in equipment damage.

3. Repair small dents and distorted areas by bending or hammering, as long as the operation does not cause materials to crack or tear. Do not attempt sharp bends.

Table 1. Stop-Drill Sizes for Negligible Cracks.

SHEET THICKNESS (IN.)	MINIMUM STOP-DRILL SIZE NO.
0 to 0.032	40
0.033 and Thicker	30

REPAIR OF NEGLIGIBLE DAMAGE - Continued

REPAIR BY PATCHING

1. Most body panel damage that exceeds the limits of negligible damage may be repaired by patching. This procedure involves removal of damaged area (Figure 5, Item 2) and application of a patch (Figure 5, Item 3) to cover the area. The damaged area is prepared by removal of the damage by rounding or smoothing of all corners and edges. This helps ensure that cracks will not spread into undamaged areas.
2. In the case of a large crack (Figure 5, Item 5), it may be desirable to stop drill the crack rather than cut out a portion of the panel (Figure 5, Item 6) or structural member. Complete the repair by applying a large patch (Figure 5, Item 4) over the area that was damaged. The overlap must be sufficient to allow the observance of proper rivet-edge distance (Figure 5, Item 1). Large areas of damage are best repaired using a patch that is attached with multiple rows of rivets.

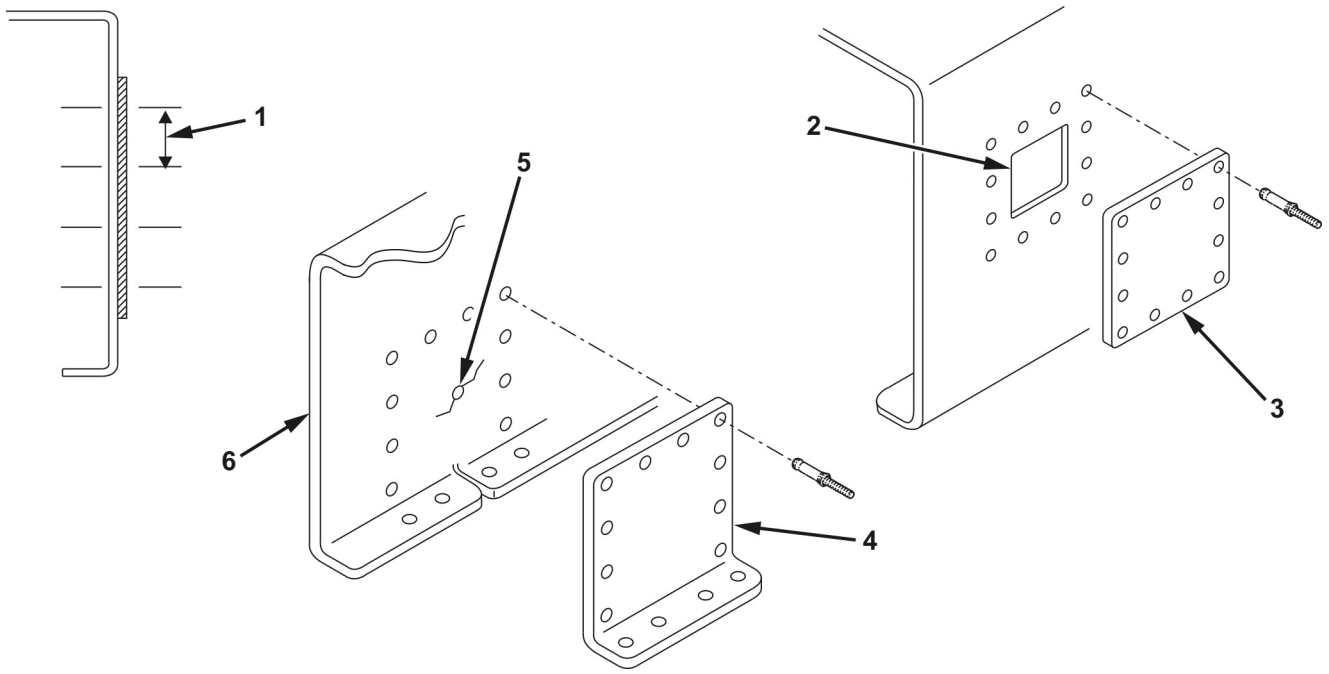

Figure 5. Repair by Patching.

REPAIR BY INSERTION

For damage that is large or more severe in nature than a crack or hole, it is often desirable to remove damaged area (Figure 6, Item 1), insert a piece of material (Figure 6, Item 3) into removed area, and reinforce this with a doubler (Figure 6, Item 2). This method of repair is typically stronger and stiffer than an added patch.

REPAIR BY INSERTION - Continued

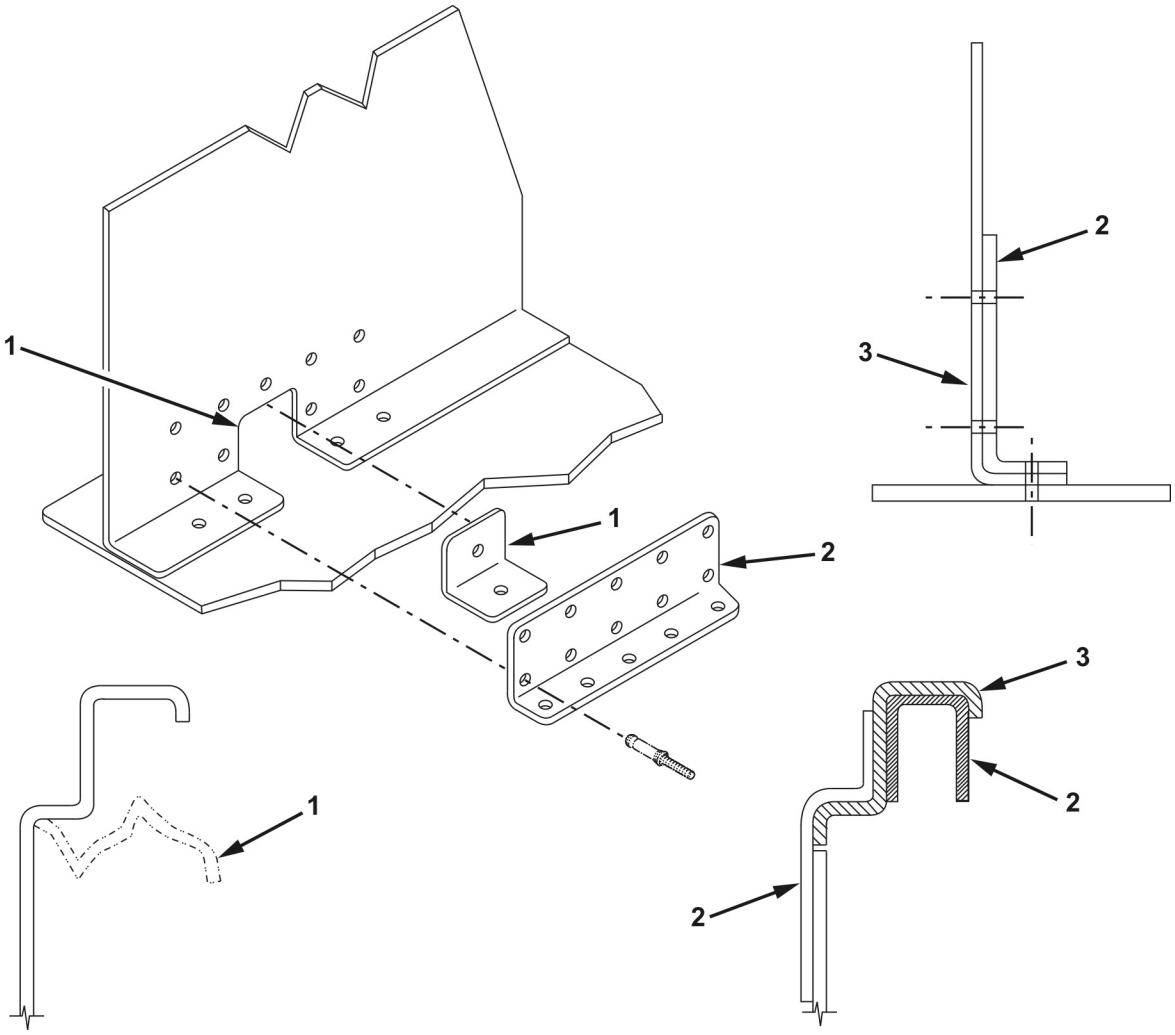

Figure 6. Repair by Insertion.

END OF TASK

END OF WORK PACKAGE

FIELD MAINTENANCE
REFLECTOR AND TIEDOWN LOOP REPLACEMENT

INITIAL SETUP:

Tools and Special Tools
- Tool Kit, General Mechanic's (WP 0096, Table 1, Item 1)
- Tool Kit, Blind Riveter (WP 0096, Table 1, Item 12)

Materials/Parts
- Rivet Qty: 2 (WP 0084, Figure 16, Item 1)
- Rivet Qty: 2 (WP 0084, Figure 16, Item 11)

Equipment Condition
- Parked on level surface
- Wheels chocked (WP 0005)
- Handbrake applied
- Intervehicular cable disconnected from towing vehicle (WP 0005)

NOTE

This procedure is for one reflector and one tiedown loop. All reflectors and tiedown loops are the same.

REMOVAL

WARNING

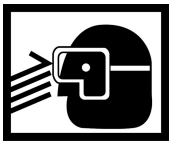

Wear eye protection when driving heads off rivets. Failure to comply may result in eye injury or loss of vision. Seek medical attention in event of injury.

1. Drive heads off of two rivets (Figure 1, Item 3), securing reflector (Figure 1, Item 1) to cargo body (Figure 1, Item 2).
2. Remove rivets (Figure 1, Item 3) and reflector (Figure 1, Item 1) from cargo body (Figure 1, Item 2). Discard rivets.
3. Drive heads off of two rivets (Figure 1, Item 5) and remove two rivets and tiedown loop (Figure 1, Item 4) from cargo body (Figure 1, Item 2). Discard rivets.

END OF TASK

INSTALLATION

1. Install reflector (Figure 1, Item 1) on cargo body (Figure 1, Item 2) with two new rivets (Figure 1, Item 3).
2. Install tiedown loop (Figure 1, Item 4) on cargo body (Figure 1, Item 2) with two new rivets (Figure 1, Item 5).

INSTALLATION - Continued

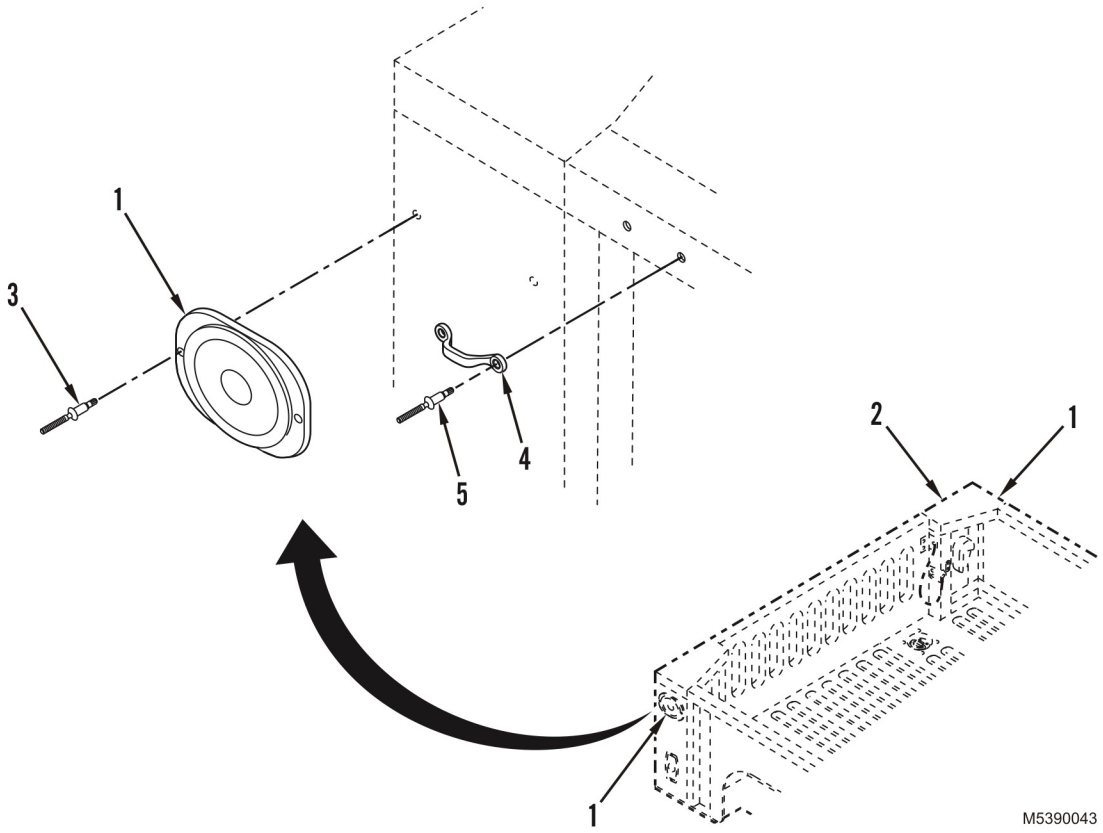

Figure 1. Reflector and Tiedown Loop Removal and Installation.

END OF TASK

END OF WORK PACKAGE

FIELD MAINTENANCE
DECONTAMINATION BRACKET MAINTENANCE

INITIAL SETUP:

Tools and Special Tools
- Tool Kit, General Mechanic's (WP 0096, Table 1, Item 1)
- Drill Bit, 1/2-in.-diameter (WP 0096, Table 1, Item 7)
- Drill, Electric (WP 0096, Table 1, Item 6)
- Threaded Insert Tool (WP 0096, Table 1, Item 11)
- Wrench, Torque: 3/8-in. drive, 5-75 lb-ft (WP 0096, Table 1, Item 16)

Materials/Parts
- Lockwasher Qty: 3 (WP 0084, Figure 16, Item 5)
- Threaded Insert Qty: 3 (WP 0084, Figure 16, Item 9)

Equipment Condition
- Parked on level surface
- Wheels chocked (WP 0005)
- Handbrake applied
- Intervehicular cable disconnected from towing vehicle (WP 0005)

REMOVAL

1. Remove web straps (Figure 1, Item 5) from decontamination bracket (Figure 1, Item 4).
2. Remove three screws (Figure 1, Item 1), lockwashers (Figure 1, Item 2), and washers (Figure 1, Item 3) from decontamination bracket (Figure 1, Item 4). Discard lockwashers.
3. Remove decontamination bracket (Figure 1, Item 4) from frame (Figure 1, Item 6).

WARNING

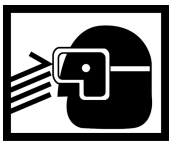

Drilling creates metal chips which may enter eyes and cause injury to eyes. Always wear eye protection when drilling. Failure to comply may result in injury to personnel. Seek medical attention in the event of injury.

NOTE

If threaded inserts are damaged or missing, perform steps 4 through 6.

4. Use 1/2-in. drill bit to drill through head of threaded insert and remove head of insert.
5. Use 5/16-in. pin punch to punch out shank of threaded insert. Punch only enough to disengage. Move insert aside to install new insert.
6. Install new threaded insert (Figure 1, Item 7) per instructions enclosed in the threaded insert package.

END OF TASK

INSTALLATION

1. Install decontamination bracket (Figure 1, Item 4) on frame (Figure 1, Item 6).
2. Install three washers (Figure 1, Item 3), new lockwashers (Figure 1, Item 2), and screws (Figure 1, Item 1) to decontamination bracket (Figure 1, Item 4). Torque screws to 20 lb-ft (27 N•m).
3. Install web straps (Figure 1, Item 5) on decontamination bracket (Figure 1, Item 4).

INSTALLATION - Continued

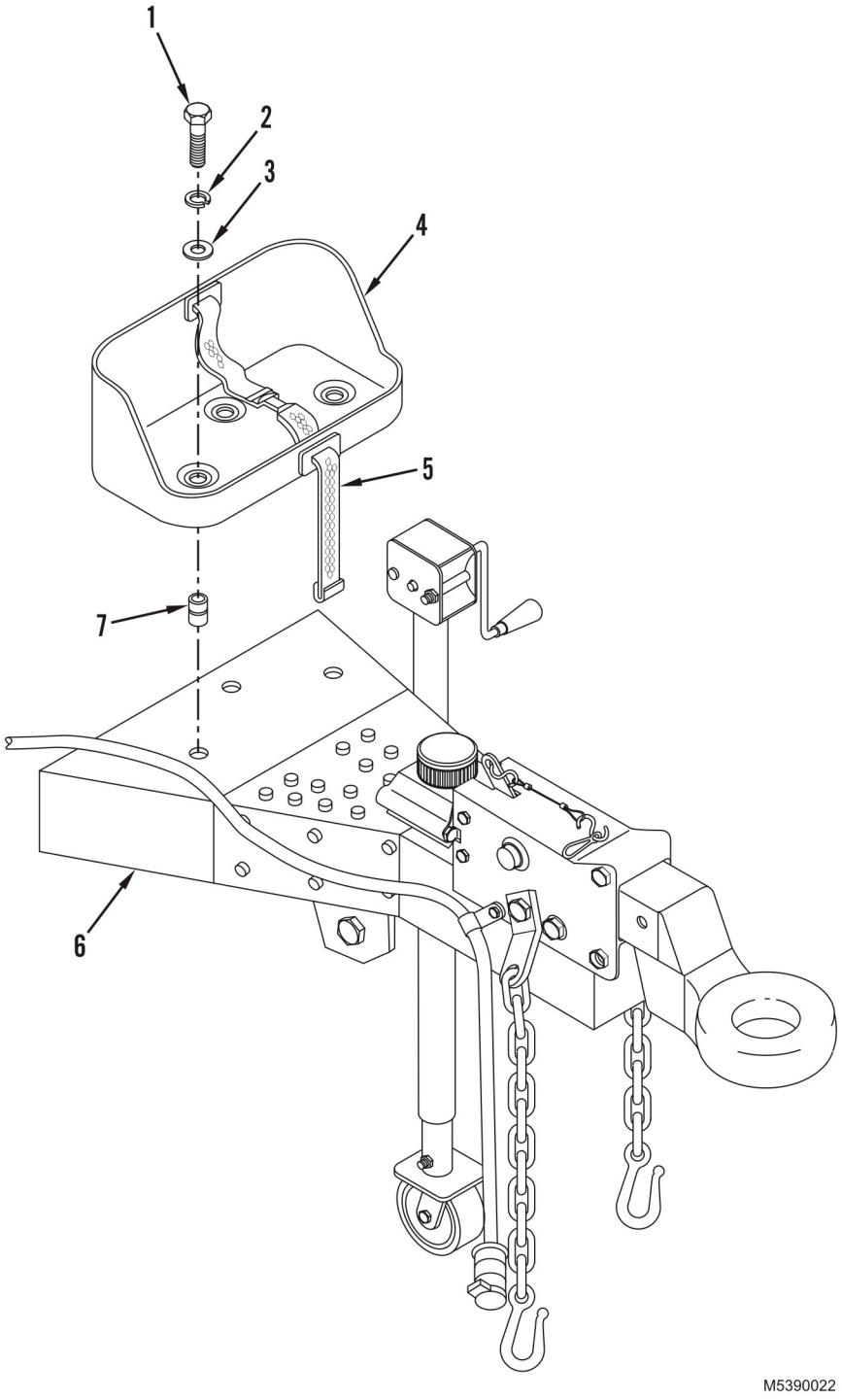

Figure 1. Decontamination Bracket Removal and Installation.

END OF TASK

END OF WORK PACKAGE

FIELD MAINTENANCE
DATA PLATE AND SHIPPING PLATE REPLACEMENT

INITIAL SETUP:

Tools and Special Tools
- Tool Kit, General Mechanic's (WP 0096, Table 1, Item 1)
- Die Set, Metal Stamping: 3/16-in. heavy duty (WP 0096, Table 1, Item 4)
- Die Set, Metal Stamping: 3/16-in. standard (WP 0096, Table 1, Item 5)
- Tool Kit, Blind Riveter (WP 0096, Table 1, Item 12)

Materials/Parts
- Rivet Qty: 4 (WP 0085, Figure 17, Item 2)
- Rivet Qty: 4 (WP 0085, Figure 17, Item 3)

Equipment Condition
- Parked on level surface
- Wheels chocked (WP 0005)
- Handbrake applied
- Intervehicular cable disconnected from towing vehicle (WP 0005)

DATA PLATE REMOVAL

WARNING

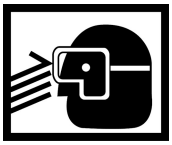

Wear eye protection when driving heads off rivets. Failure to comply may result in eye injury or loss of vision. Seek medical attention in event of injury.

Remove four rivets (Figure 1, Item 3) and data plate (Figure 1, Item 2) from trailer frame (Figure 1, Item 1). Discard rivets.

END OF TASK

DATA PLATE INSTALLATION

1. If serial number is missing, add to data plate (Figure 1, Item 2) using metal stamping die sets.
2. Install data plate (Figure 1, Item 2) to trailer frame (Figure 1, Item 1) with four new rivets (Figure 1, Item 3).

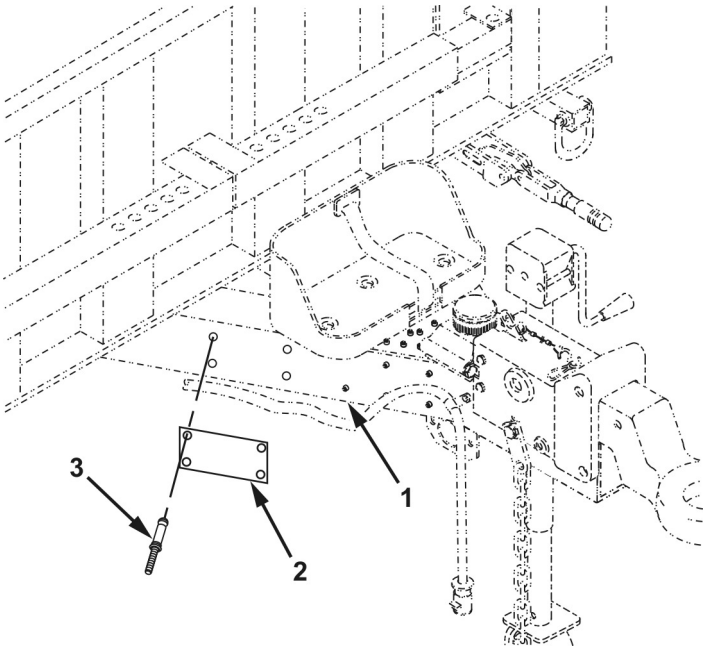

Figure 1. Data Plate Removal and Installation.

END OF TASK

SHIPPING PLATE REMOVAL

WARNING

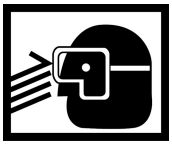

Wear eye protection when driving heads off rivets. Failure to comply may result in eye injury or loss of vision. Seek medical attention in event of injury.

Remove four rivets (Figure 2, Item 2) and shipping plate (Figure 2, Item 3) from cargo body (Figure 2, Item 1). Discard rivets.

END OF TASK

SHIPPING PLATE INSTALLATION

Install shipping plate (Figure 2, Item 3) to cargo body (Figure 2, Item 1) with four new rivets (Figure 2, Item 2).

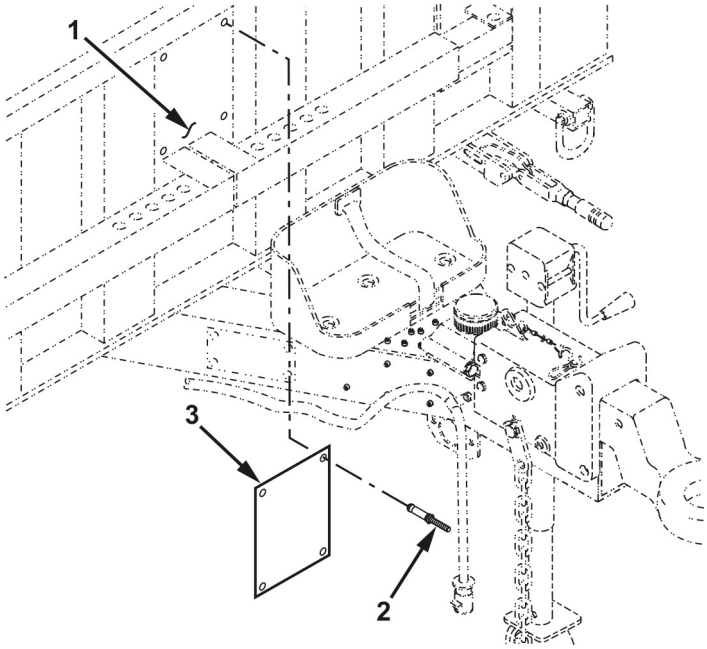

Figure 2. Shipping Plate Removal and Installation.

END OF TASK

END OF WORK PACKAGE

FIELD MAINTENANCE
SOFT TOP KIT

INITIAL SETUP:

Tools and Special Tools

Tool Kit, General Mechanic's (WP 0096, Table 1, Item 1)
Drill Bit, 1/2-in.-diameter (WP 0096, Table 1, Item 7)
Drill, Electric (WP 0096, Table 1, Item 6)
Threaded Insert Tool (WP 0096, Table 1, Item 11)
Wrench, Torque: 3/8-in. drive, 5-75 lb-ft (WP 0096, Table 1, Item 16)

Materials/Parts

Soft Top Kit (WP 0094, Table 1)
Threaded Insert Qty: A/R (WP 0084, Figure 16, Item 9)
Threaded Insert Qty: A/R (WP 0084, Figure 16, Item 15)

References

WP 0058

Equipment Condition

Parked on level surface
Wheels chocked (WP 0005)
Handbrake applied
Intervehicular cable disconnected from towing vehicle (WP 0005)

INSTALLATION

1. Install front brackets (Figure 1, Item 10) to trailer (Figure 1, Item 6) with bolts (Figure 1, Item 9) and washers (Figure 1, Item 8). Torque bolts to 20 lb-ft (27 N•m).
2. Install center brackets (Figure 1, Item 2) to trailer (Figure 1, Item 6) with bolts (Figure 1, Item 3) and washers (Figure 1, Item 4). Torque bolts to 20 lb-ft (27 N•m).
3. Install rear brackets (Figure 1, Item 10) to trailer (Figure 1, Item 6) with bolts (Figure 1, Item 9) and washers (Figure 1, Item 8). Torque bolts to 20 lb-ft (27 N•m).

NOTE

The two shortest bows are installed in the front mount brackets.

4. Install four bows (Figure 1, Item 11) into brackets (Figure 1, Item 2 and Item 10).
5. Position the soft top (Figure 1, Item 1) over bows (Figure 1, Item 11), and secure to trailer (Figure 1, Item 6) with attached straps and hooks (Figure 1, Item 7).

END OF TASK

REMOVAL

1. Detach straps and hooks (Figure 1, Item 7) from trailer (Figure 1, Item 6), and remove soft top (Figure 1, Item 1).
2. Remove four bows (Figure 1, Item 11) from trailer (Figure 1, Item 6).
3. Remove bolts (Figure 1, Item 9), washers (Figure 1, Item 8), and rear brackets (Figure 1, Item 10) from trailer (Figure 1, Item 6).
4. Remove bolts (Figure 1, Item 3), washers (Figure 1, Item 4), and center brackets (Figure 1, Item 2) from trailer (Figure 1, Item 6).
5. Remove bolts (Figure 1, Item 9), washers (Figure 1, Item 8), and front brackets (Figure 1, Item 10) from trailer (Figure 1, Item 6).

WARNING

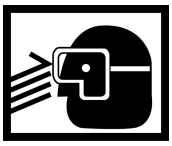

Drilling creates metal chips which may enter eyes and cause injury to eyes. Always wear eye protection when drilling. Failure to comply may result in injury to personnel. Seek medical attention in the event of injury.

NOTE

If threaded inserts are damaged or missing, perform steps 6 through 8.

6. Use 1/2-in. drill bit to drill through head of threaded insert and remove head of insert.
7. Use 5/16-in. pin punch to punch out shank of threaded insert. Punch only enough to disengage. Move insert aside to install new insert.

REMOVAL - Continued

NOTE

Holes that are elongated must be patched per (WP 0057) and re-drilled using 1/2-in.-diameter drill bit.

8. Install new threaded insert (Figure 1, Item 5) per instructions enclosed in threaded insert package.

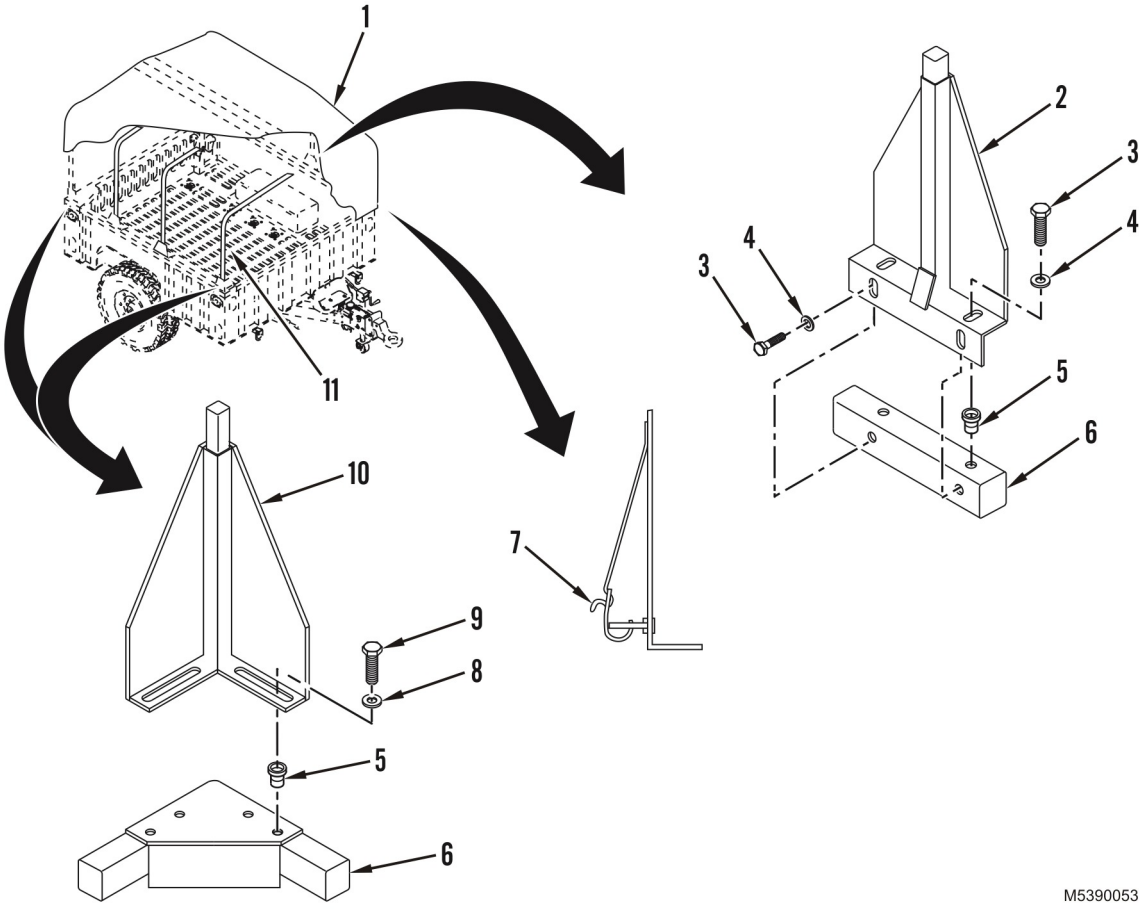

Figure 1. Soft Top Kit Removal and Installation.

END OF TASK

END OF WORK PACKAGE

FIELD MAINTENANCE
PAINTING AND IDENTIFICATION MARKING

INITIAL SETUP:

References
TB 43-0209
TM 43-0139

WARNING

The publications referenced in this work package contain safety and environmental precautions and instructions that must be understood and applied during the painting of the trailer to ensure personnel against injury, long-term health hazards, or death. Failure to comply may result in personnel death or injury. Seek medical attention in event of injury.

PAINTING

1. Instructions for the preparation of material for painting, methods of painting, and materials to be used are contained in TM 43-0139, Painting Instructions for Army Materiel.
2. Instructions for camouflage painting are contained in TB 43-0209, Color, Marking, and Camouflage Painting of Military Vehicles, Construction Equipment, and Materials Handling Equipment.

STENCILING

Refer to TB 43-0209 for instructions on application of stencils.

END OF TASK

END OF WORK PACKAGE

FIELD MAINTENANCE
PREPARATION FOR STORAGE OR SHIPMENT

INITIAL SETUP:

References
AR 700-15
DA Form 2404
DA Form 2407
DA Form 2408-9
DA Form 5988-E

References (cont.)
DA PAM 750-8
TM 55-2200-001-12
WP 0026
WP 0062
WP 0064

GENERAL

1. This work package contains requirements and procedures for administrative storage of equipment that is issued to and in use by Army activities worldwide.
2. The requirements specified herein are necessary to maintain equipment in administrative storage in such a way as to achieve the maximum readiness condition.
3. Equipment that is placed in administrative storage should be capable of being readied to perform its mission within a 24-hour period, or as otherwise prescribed by the approving authority. Before equipment is placed in administrative storage, a current Preventive Maintenance Checks and Services (PMCS) should be completed and deficiencies corrected.
4. Report equipment in administrative storage as prescribed for all reportable equipment.
5. Perform inspections, maintenance services, and lubrication as specified herein.
6. Records and reports to be maintained for equipment in administrative storage are those prescribed by DA PAM 750-8.
7. A 10 percent variance is acceptable on time, running hours, or mileage used to determine the required maintenance actions.

DEFINITION OF ADMINISTRATIVE STORAGE

The placement of equipment in administrative storage can be for short periods of time when a shortage of maintenance effort exists. Equipment should be ready for use within the time factors as determined by the directing authority. During the storage period, appropriate maintenance records will be kept.

END OF TASK

PREPARATION OF EQUIPMENT FOR ADMINISTRATIVE STORAGE

1. Storage Site.
   a. Select the best available site for administrative storage. Separate stored equipment from equipment in use. Conspicuously mark the area "Administrative Storage."
   b. Covered space is preferred.
   c. Open sites should be improved hardstand, if available. Unimproved sites should be firm, well drained, and free of excessive vegetation.
2. Storage Plan.
   a. Store equipment so as to provide maximum protection from the elements and to provide access for inspection, maintenance, and exercising. Anticipate removal or deployment problems and take suitable precautions.

PREPARATION OF EQUIPMENT FOR ADMINISTRATIVE STORAGE - Continued

b. Take into consideration environmental conditions, such as extreme heat and cold; high humidity; blowing sand, dust, or loose debris; soft ground; mud; heavy snows; or combinations thereof, and take adequate precautions.

c. Establish a fire plan and provide for adequate fire fighting equipment and personnel.

3. Maintenance Services and Inspection.

a. Maintenance Services. Prior to storage, perform the next scheduled Field PMCS.

b. Inspection. Inspect and approve the equipment prior to storage. Do not place equipment in storage if it is in a nonmission capable condition.

4. Correction of Shortcomings and Deficiencies. Correct all shortcomings and deficiencies prior to storage, or obtain a deferment from the approving authority.

5. Lubrication. Lubricate equipment in accordance with instructions in Lubrication Instructions (WP 0064).

6. General Cleaning, Painting, and Preservation.

PREPARATION OF EQUIPMENT FOR ADMINISTRATIVE STORAGE - Continued

WARNING

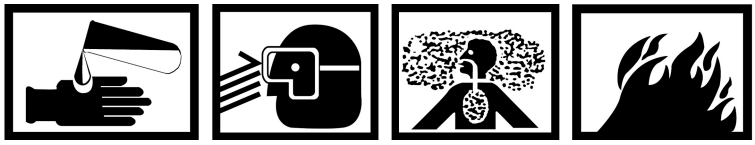

- **Solvent cleaning compound MIL-PRF-680 may be irritating to the eyes and skin. Wear protective gloves and goggles. First aid for skin contact: remove contaminated clothing. Wash skin thoroughly with soap and water. First aid for eye contact: flush with water for 15 minutes or until irritation subsides. If symptoms persist, seek medical attention. Failure to comply may result in personnel death or injury. Seek medical attention in event of injury.**
- **Use solvent cleaning compound MIL-PRF-680 in a well-ventilated area. Use respirator as needed. Accidental ingestion can cause irritation of digestive tract and respiratory tract. May cause lung and central nervous system damage. Can be fatal if swallowed. Inhalation of high/massive concentrations can cause coma or be fatal. First aid for ingestion: DO NOT induce vomiting. Seek immediate medical attention. First aid for inhalation: move to fresh air. If not breathing, provide artificial respiration. If symptoms persist, seek medical attention. Failure to comply may result in personnel death or injury. Seek medical attention in event of injury.**
- **MIL-PRF-680 solvent is combustible; DO NOT use or store near heat, sparks, flame, or other ignition sources. Use mechanical ventilation whenever product is used in a confined space, heated above ambient temperatures, or agitated. Keep container sealed when not in use. Failure to comply may result in personnel death or injury. Seek medical attention in event of injury.**
- **Improper cleaning methods and use of unauthorized cleaning liquids or solvents can injure personnel and damage equipment. Failure to comply may result in personnel death or injury. Seek medical attention in event of injury.**
- **Cloths or rags saturated with solvent cleaning compound must be disposed of in accordance with authorized facility procedures. Failure to comply may result in personnel death or injury. Seek medical attention in event of injury.**

CAUTION

DO NOT direct water or steam under pressure against unsealed electrical components, master cylinder fill cap, or any exterior opening. Failure to comply may result in equipment damage.

a. Cleaning. Clean the equipment of dirt, grease, and other contaminants, but do not use vapor degreasing.

b. Painting. Prepare and paint equipment in accordance with instructions in Painting and Identification Marking (WP 0062).

c. Preservation. After cleaning and drying, immediately coat unpainted metal surfaces with oil or grease, as appropriate, in accordance with instructions in Lubrication Instructions (WP 0064).

CARE OF EQUIPMENT IN ADMINISTRATIVE STORAGE

1. Maintenance Service. After equipment has been placed in administrative storage, inspect, service, and exercise as specified herein.
2. Inspection. Inspection will usually be visual and must consist of at least a walkaround examination of all equipment to detect any deficiencies. Inspect equipment in open storage weekly and equipment in covered storage monthly. Inspect equipment immediately after any severe storm or environmental change. The following are examples of things to look for during a visual inspection:
   a. Low or flat tires.
   b. Condition of preservatives, seals, and wraps.
   c. Corrosion or deterioration.
   d. Missing or damaged parts.
   e. Standing water.
   f. Any other readily recognizable shortcomings or deficiencies.
3. Repair During Administrative Storage. Keep equipment in an optimum state of readiness. Accomplish the required services and repairs as quickly as possible. Whenever possible, perform all maintenance onsite.
4. Exercising. Exercise equipment in accordance with the table below and the following instructions:
   a. Vehicle Major Exercise. Depreserve equipment by removing only that material restricting exercise. Remove blocks and perform all before-operation checks. Couple trailer to towing vehicle and drive for at least 25 mi (40 km). Make several left and right 90 degree turns. Make several hard braking stops without skidding. Operate all other functional components and perform all during-operation and after-operation checks.
   b. Scheduled Services. Scheduled services will include inspection and will be conducted in accordance with the table below. Lubricate in accordance with Lubrication Instructions (WP 0064).

Table 1. Scheduled Services.

WEEKS	2	4	6	8	10	12	14	16	18	20	22	24
PMCS						X						X
SCHEDULED SERVICES		X		X		X		X		X		X
MAJOR EXERCISE												X

   c. Corrective Action. Immediately take action to correct shortcomings and deficiencies noted. Record inspection and exercise results on DA Form 2404 or DA Form 5988-E. Record and report all maintenance actions on DA Form 2407. After exercising, restore the preservation to the original condition. Replenish lubricants used during exercising and note the amount on DA Form 2408-9.
5. Rotation. Rotate items in accordance with any rotational plan that will keep the equipment in an operational condition and reduce the maintenance effort.

END OF TASK

PROCEDURES FOR COMMON COMPONENTS AND MISCELLANEOUS ITEMS

1. Tires. Visually inspect tires during each walkaround inspection. This inspection includes checking tires with a tire gage. Inflate, repair, or replace as necessary those tires found to be low, damaged, or excessively worn. Mark inflated and repaired tires for checking at the next inspection.
2. Seals. Seals may develop leaks during storage, or shortly thereafter. If leaking persists, refer to the applicable maintenance work package in this manual for corrective maintenance procedures.

END OF TASK

REMOVAL OF EQUIPMENT FROM ADMINISTRATIVE STORAGE

1. Activation. Restore the equipment to normal operating condition in accordance with the instructions contained in Service Upon Receipt (WP 0026).
2. Servicing. Resume the maintenance service schedule in effect at the commencement of storage, or service the equipment before the scheduled dates in order to produce a staggered workload.

END OF TASK

PREPARATION OF EQUIPMENT FOR SHIPMENT

1. Height and width of vehicles prepared for rail transportation must not exceed the limitations of AR 700-15. Whenever possible, local transportation personnel must be consulted about limitations of particular railroad lines to be used for movement in order to avoid delays, dangerous conditions, or damage to equipment.
2. Loading and blocking procedures for flatcar shipment must be in accordance with TM 55-2200-001-12.
3. Loading and blocking of vehicles for highway shipment must be in accordance with Interstate Commerce Commission Publication "Motor Carrier Safety Regulations."
4. Refer to TM 55-2200-001-12 for additional instructions on processing, storage, and shipment of material.

END OF TASK

END OF WORK PACKAGE

FIELD MAINTENANCE
LUBRICATION INSTRUCTIONS

INITIAL SETUP:

References
DA PAM 750-8
FM 9-207
TM 9-214

GENERAL

WARNING

Accidental or intentional introduction of liquid contaminants into the environment is a violation of state, federal, and military regulations. Refer to Army Petroleum, Oils, and Lubricants (POL) for information concerning storage, use, and disposal of these liquids. Failure to comply may cause damage to environment and health of personnel. Seek medical attention in the event of an injury.

NOTE

These instructions are ***MANDATORY***.

1. The trailer must receive lubrication with approved lubricants at recommended intervals in order to be mission-ready at all times.
2. The "Lubrication Chart" shows the lubrication points, names of items to be lubricated, the required lubricants, and the recommended interval for lubrication. Any special lubricating instructions required for specific components are in the NOTES section of the "Lubrication Chart."
3. The KEY lists lubricants to be used in all temperature ranges and shows the intervals.
4. Recommended intervals are based on normal conditions of operation, temperature, and humidity. When operating under extreme conditions, change lubricants more frequently. When in doubt, notify your supervisor.

SPECIFIC LUBRICATION INSTRUCTIONS

1. Keep all lubricants in closed containers and stored in a clean, dry place away from extreme heat. Keep container covers clean and do not allow dust, dirt, or other foreign material to mix with lubricants. Keep all lubrication equipment clean and ready to use.
2. Maintain a record of lubrication performed, and report any problems noted during lubrication. Refer to DA PAM 750-8 for applicable forms and procedures to record and report any findings.

SPECIFIC LUBRICATION INSTRUCTIONS - Continued

WARNING

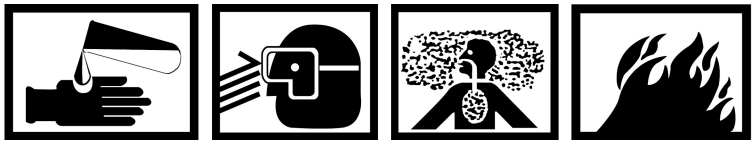

- **Solvent cleaning compound MIL-PRF-680 may be irritating to the eyes and skin. Wear protective gloves and goggles. First aid for skin contact: remove contaminated clothing. Wash skin thoroughly with soap and water. First aid for eye contact: flush with water for 15 minutes or until irritation subsides. If symptoms persist, seek medical attention. Failure to comply may result in personnel death or injury. Seek medical attention in event of injury.**
- **Use solvent cleaning compound MIL-PRF-680 in a well-ventilated area. Use respirator as needed. Accidental ingestion can cause irritation of digestive tract and respiratory tract. May cause lung and central nervous system damage. Can be fatal if swallowed. Inhalation of high/massive concentrations can cause coma or be fatal. First aid for ingestion: DO NOT induce vomiting. Seek immediate medical attention. First aid for inhalation: move to fresh air. If not breathing, provide artificial respiration. If symptoms persist, seek medical attention. Failure to comply may result in personnel death or injury. Seek medical attention in event of injury.**
- **MIL-PRF-680 solvent is combustible; DO NOT use or store near heat, sparks, flame, or other ignition sources. Use mechanical ventilation whenever product is used in a confined space, heated above ambient temperatures, or agitated. Keep container sealed when not in use. Failure to comply may result in personnel death or injury. Seek medical attention in event of injury.**
- **Improper cleaning methods and use of unauthorized cleaning liquids or solvents can injure personnel and damage equipment. Failure to comply may result in personnel death or injury. Seek medical attention in event of injury.**
- **Cloths or rags saturated with solvent cleaning compound must be disposed of in accordance with authorized facility procedures. Failure to comply may result in personnel death or injury. Seek medical attention in event of injury.**

3. Use cleaning solvent (WP 0095, Table 1, Item 6) to clean grease fittings, lubrication points, and surrounding areas before lubricating.

WARNING

Wipe excess lubricant from the area of brakeshoe linings to avoid grease soaking the linings. If brakeshoe linings become soaked, replace them. Failure to follow this warning may cause brakes to malfunction. Failure to comply may result in personnel death or injury. Seek medical attention in event of injury.

4. After lubrication, wipe off excess oil or grease to prevent accumulation of foreign matter.
5. Refer to FM 9-207 for lubrication instructions in cold weather.
6. After operation in muddy, sandy, or dusty conditions, clean and inspect all lubrication points for fouled lubricants. Change lubricants as required.

SPECIFIC LUBRICATION INSTRUCTIONS - Continued

Table 1. Lubrication Chart.

TRAILER, CARGO: LIGHT, TWO-WHEEL M1101
(2330-01-387-5443)
TRAILER, CARGO: HEAVY, TWO-WHEEL M1102
(2330-01-387-5426)
CHASSIS, TRAILER: TWO-WHEEL
(2330-01-387-5424)

Intervals (on-condition or hard time) and related man-hours are based on normal operation. The man-hour time specified is the time you need to do all services prescribed for a particular interval. Decrease the intervals if your lubricants are contaminated or if you are operating equipment under adverse conditions, including longer-than-usual operating hours. The intervals may be extended during periods of low activity. If extended, adequate preservation precautions must be taken.

Dotted leader lines indicate lubrication is required on both sides of the equipment.

NOTES

1. For Operation of Equipment in Protracted Cold Temperatures Below −10°F (−23°C). Remove lubricants prescribed in the KEY for temperatures above −10°F (−23°C). Clean parts with cleaning solvent (WP 0095, Table 1, Item 6). Lubricate with lubricants specified in the KEY for temperatures 0°F (−18°C) to −65°F (−54°C).
2. Oil Can Points. Semiannually, or as required, lubricate handbrake levers and linkage, hydraulic brake actuator assembly, shock strut pivot and slide points, front support leg pivot points and handcrank, rear stabilizer pivot points and latches, tailgate hinges and latches, and all threaded body inserts.
3. Master Cylinder. Semiannually, or as required, fill to within 0.125 in. (3 mm) of bottom of reservoir neck.
4. Wheel Bearings. Semiannually, or as required, remove, clean, inspect, pack with Grease Automotive Artillery (GAA), and install. Refer to TM 9-214, Inspection, Care, and Maintenance of Antifriction Bearings.

SPECIFIC LUBRICATION INSTRUCTIONS - Continued

Table 1. Lubrication Chart - Continued.

LUBRICANT	INTERVAL	INTERVAL	LUBRICANT
HYDRAULIC BRAKE ACTUATOR (C) GAA (NOTES I AND 2) (SEE DETAIL A)	S	S	REAR STABILIZERS (C) GAA AND OE/HDO (NOTES 1 AND 2) (SEE DETAIL D)
FRONT SUPPORT LEG (C) GAA AND OE/HDO (NOTES I AND 2) (SEE DETAIL A)	S	S	ALL THREADED BODY INSERTS (F) OE/HDO
WHEEL BEARINGS (F) GAA (NOTE 4) (SEE DETAIL B)	S	S	HANDBRAKE LEVER LINKAGE (C) GAA AND OE/HDO (NOTES 1 AND 2) (SEE DETAIL F)
TAILGATE HINGES AND LATCHES (C) (CARGO ONLY) OE/HDO (NOTES I AND 2) (SEE DETAIL C)	S	S	MASTER CYLINDER (C) BFS (NOTE 3) (SEE DETAIL E)

The lowest level of maintenance authorized to lubricate a point is indicated in parentheses by use of the following: (C) Operator/Crew; or (F) Field maintenance.

TOTAL MAN-HOURS*	
INTERVAL	MAN-HOUR
S	3.0

* The man-hour time specified is the time you need to do all services prescribed for a particular interval.

M5390017

SPECIFIC LUBRICATION INSTRUCTIONS - Continued

Table 1. Lubrication Chart - Continued.

-KEY-				
LUBRICANTS	EXPECTED TEMPERATURES			
	ABOVE +32° F ABOVE 0 °C	+40° F to -10° F (+4 °C to -23°C)	0° F to -65° F (-18°C to -54°C)	INTERVALS
OE/HDO (MIL-PRF-2104) Lubricating Oil, Internal Combustion Engine, Tactical Service	OE/HDO-30	OE/HDO-10	-	S- Semiannual
OEA (MIL-PRF-46167) Lubricating Oil, Internal Combustion Engine, Arctic	-	-	OEA	
BFS (MIL-PRF-46176) Brake Fluid, Silicone, Automotive	All Temperatures			
GAA (MIL-PRF-10924) Grease, Automotive and Artillery	All Temperatures			

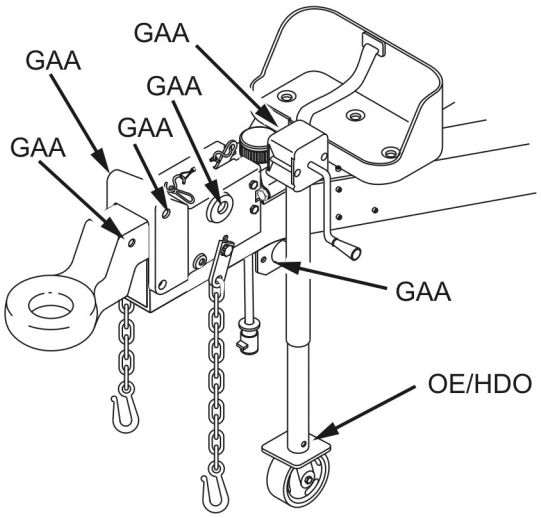

Ⓐ FRONT SUPPORT LEG AND HYDRAULIC BRAKE ACTUATOR

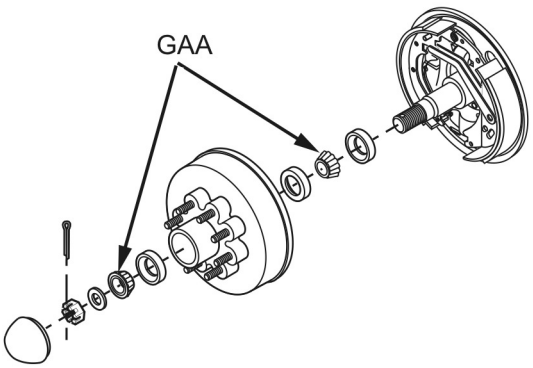

Ⓑ WHEEL BEARINGS

SPECIFIC LUBRICATION INSTRUCTIONS - Continued

Table 1. Lubrication Chart - Continued.

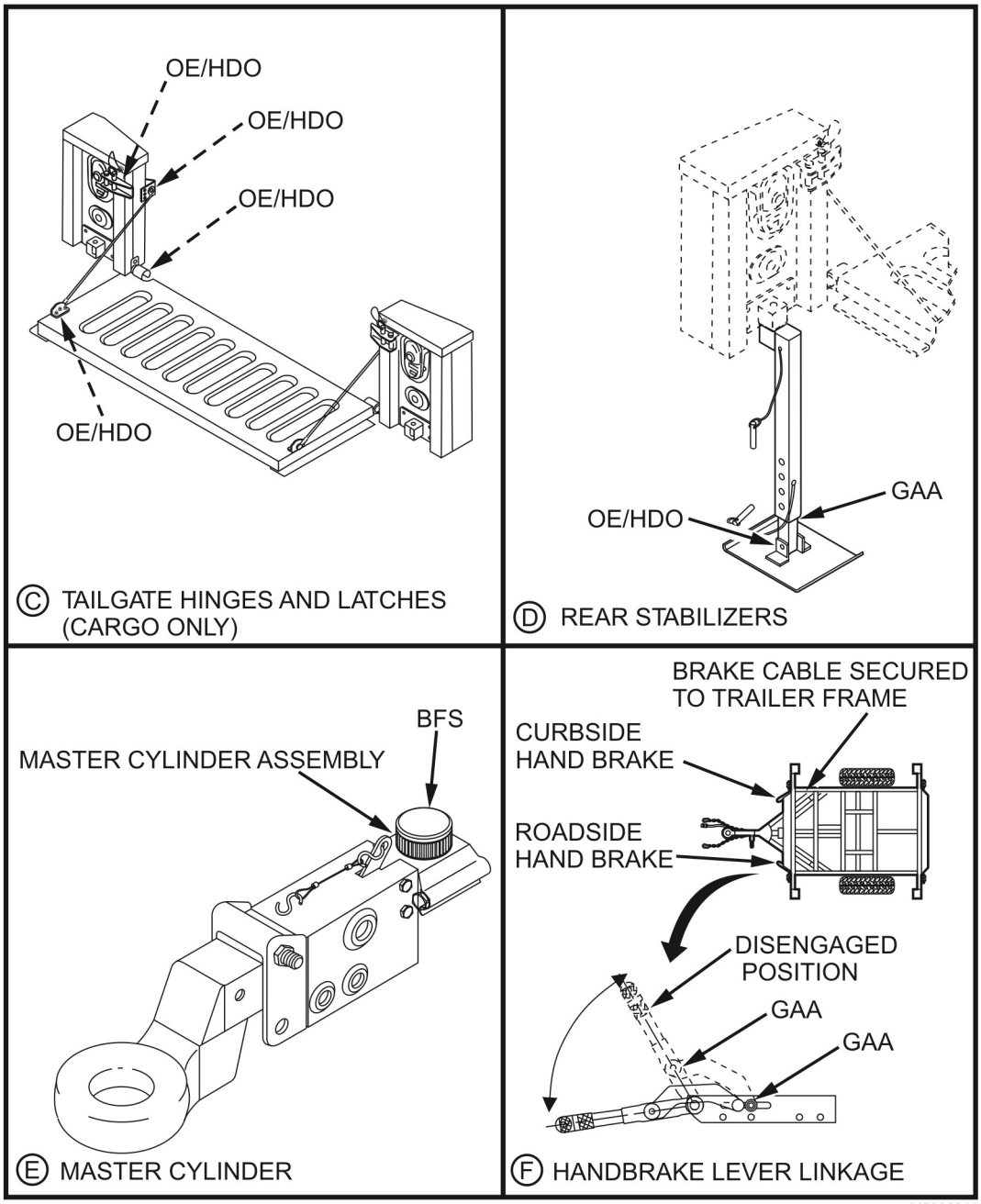

END OF WORK PACKAGE

FIELD MAINTENANCE
ILLUSTRATED LIST OF MANUFACTURED ITEMS

INITIAL SETUP:

Not Applicable

SCOPE

This work package includes complete instructions for making items authorized to be manufactured or fabricated at the Field Maintenance level.

HOW TO USE THE INDEX OF MANUFACTURED ITEMS

A part number index in alphanumeric order is provided for cross-referencing the part number of the item to be manufactured to the information which covers fabrication criteria.

EXPLANATION OF THE ILLUSTRATIONS OF MANUFACTURED ITEMS

All instructions needed by maintenance personnel to manufacture the item are included on the illustrations. All bulk materials needed for manufacture of an item are listed by part number or specification number in a tabular list on the illustration.

GENERAL

All bulk materials needed for manufacture of an item are listed by National Stock Number (NSN), part number, and Commercial and Government Entity Code (CAGEC) in the manufacturing instructions. All dimensions are given in inches.

Table 1. Manufacturing Instructions.

MATERIAL BLOCK		
STOCK SIZE	**DESCRIPTION**	**NATIONAL STOCK NUMBER**
3.0 Inches Wide	Tape, Adhesive, Rubber	9330-01-345-0507
TAPE PART NUMBER	**CUT LENGTH (INCHES)**	**MANUFACTURED FROM PART NUMBER (CAGEC)**
5588618-13	13	353191 (30076)

INSTRUCTIONS

Cut tape to length shown.

END OF WORK PACKAGE

FIELD MAINTENANCE
TORQUE LIMITS

SCOPE

This work package lists standard torque values and provides general information for applying torque. Special torque values and tightening sequences are indicated in the maintenance procedures for applicable components.

GENERAL

1. Always use torque values listed in Tables 2, 3, and 4 when a maintenance procedure does not give a specific torque value.
    a. Table 3 provides torque limits for SAE standard fasteners.
    b. Table 4 provides torque limits for metric fasteners.
2. Unless otherwise indicated, standard torque tolerance shall be ± 10 percent.
3. Torque values listed are based on clean, dry threads. Reduce torque by 10 percent when engine oil is used as a lubricant. Reduce torque by 20 percent if new plated capscrews are used.

CAUTION

If replacement capscrews are of higher grade than originally supplied, use torque specifications for the original. This will prevent equipment damage due to over torquing.

TIGHTENING METAL FASTENERS

When torquing a fastener, select a wrench with a range that fits the required torque value. A torque wrench is most accurate from 25 to 75 percent of its stated range. A wrench with a stated range of 0 to 100 lb-ft (0 to 136 N•m) will be most accurate from 25 to 75 lb-ft (34 to 102 N•m). The accuracy of readings will decrease as you approach 0 lb-ft or 100 lb-ft (136 N•m). Ranges in Table 1 are based on this principle.

Table 1. Metal Fasteners.

STATED RANGE		MOST EFFECTIVE RANGE	
0 to 200 lb-in	(0 to 23 N•m)	50 to 150 lb-in	(6 to 17 N•m)
0 to 600 lb-ft	(0 to 813 N•m)	50 to 450 lb-ft	(68 to 610 N•m)
0 to 170 lb-ft	(0 to 230 N•m)	44 to 131 lb-ft	(60 to 178 N•m)
15 to 75 lb-ft	(20 to 102 N•m)	30 to 60 lb-ft	(41 to 81 N•m)

TIGHTENING METAL FASTENERS - Continued

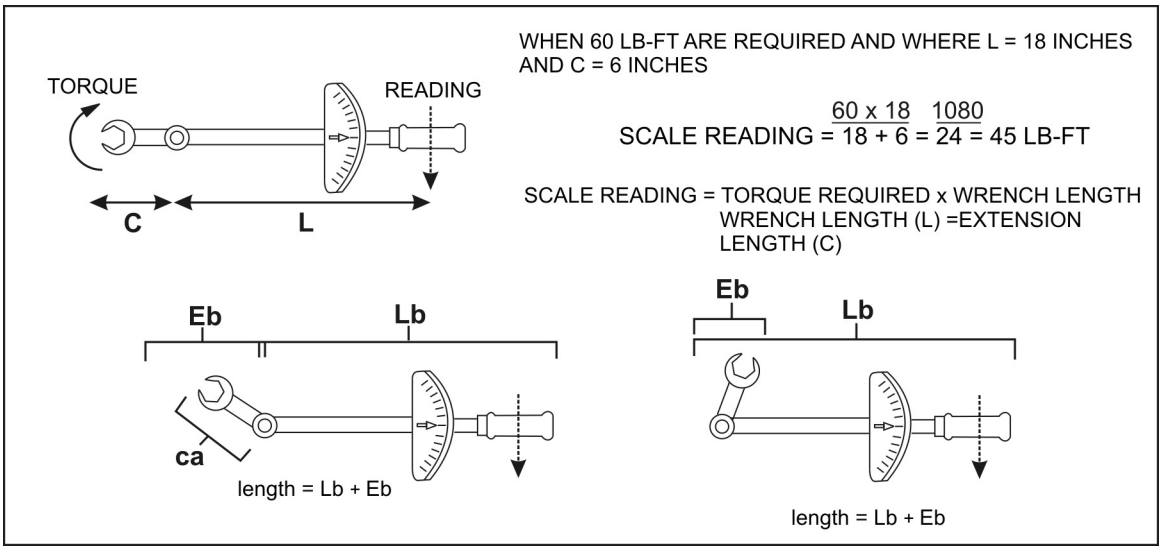

Figure 1. Torque Wrench Formulas.

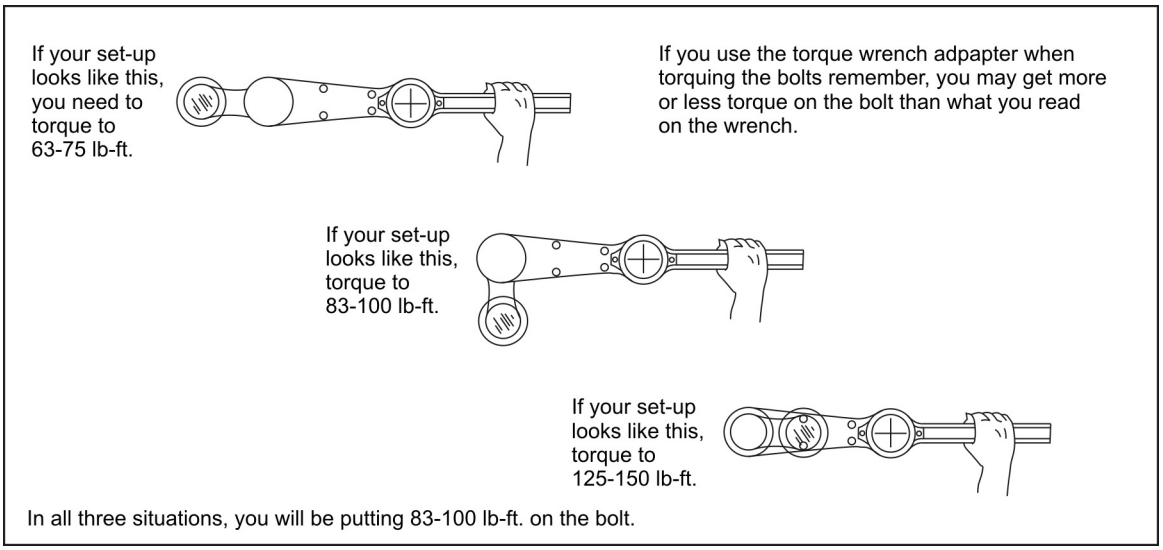

Figure 2. Torque Wrench Adapter Setups.

INSTALLATION AND TORQUING

1. **Matching Nuts.** Matching nuts require a minimum height equal to the basic diameter of the bolt. The same is true of tapped holes. In tapped softer materials, the depth of the tapped hole should be 1-1/2 times the basic diameter of the bolt.
2. **Threaded Protrusion.** In all installations, bolts, studs, and screws must extend through the nut at least a length equivalent to two complete threads. This applies to both self-locking and plain nuts.
3. **Torquing Self-Locking Nuts.** To obtain the correct recommended torque value on self-locking nuts, the nut must be tightened until it is one turn from the beginning of seating. At this point, if the torque is less than 1/3 of the recommended torque, it should be disregarded and the nut tightened to the recommended torque value. If the torque is 1/3 or more of the recommended torque, it should be added to the recommended torque. Example: The recommended torque is 50 to 70 lb-in (6 to 8 N•m). The torque at

INSTALLATION AND TORQUING - Continued

one turn from seating is 30 lb-in (3 N•m). The correct torque wrench reading would be 80 to 100 lb-in (9 to 11 N•m).

4. **Retorquing Fasteners.** Procedures intended for installing metal fasteners can cause incorrect readings when used to check or retorque already installed fasteners during maintenance. before checking or retorquing an already installed threaded fastener, first mark the fastener and its companion components so the marks are in line. Second, back it off a 1/4 turn to loosen it. Torque it to the specification with an even steady pull on the torque wrench. The marks should be in line; if not, the marks will indicate the fastener was undertorqued or overtorqued.
5. **Standard Torque Charts.** Standard torque charts have been established for dry and wet torque conditions. Surface variations such as thread roughness, scale paint, lubrication (oil, grease, etc.), hardening, and plating may alter these values considerably. Tables 2, 3, and 4 are standard dry torque charts.
6. **Grade.** To find the grade of the screw that is to be installed, match the markings on the head to the correct picture of Capscrew Head Markings in Tables 3 and 4. Manufacturers' marks may vary.

Table 2. M1101, M1102, and Chassis Torque Values.

COMPONENT LOCATION	TORQUE ± 10 PERCENT	
Axle Mounting Nuts (Side)	142 lb-ft	(192 N•m)
Axle Mounting Nuts (Top)	130 lb-ft	(176 N•m)
Shock Absorber Nuts	185 lb-ft	(251 N•m)
Backing Plate (Capscrew) Nuts	50 lb-ft	(69 N•m)
Wheel Lug Nuts	100 lb-ft	(136 N•m)
Wheel Cylinder Capscrews	168 lb-in	(19 N•m)
Hydraulic Actuator Assembly Capscrews	105 lb-ft	(142 N•m)
Tarp/Bow Bracket Capscrews	20 lb-ft	(27 N•m)
Shock Absorber Mount Nuts	72 lb-ft	(98 N•m)
Tailgate Hinge Capscrews	168 lb-in	(19 N•m)
Service Brake Adjustment	220 lb-in	(25 N•m)

INSTALLATION AND TORQUING - Continued

Table 3. Torque Limits – SAE Fasteners.

QUALITY OF MATERIAL		INDETERMINATE		MINIMUM COMMERCIAL		MEDIUM COMMERCIAL		BEST COMMERCIAL	
SAE Grade Number		1 or 2		5		6 or 7		8	
Capscrew Head Markings				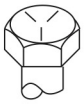				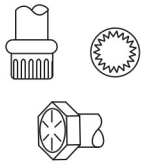	
Manufacturers' Marks May Vary									
CAPSCREW BODY SIZE IN. - THREAD		**TORQUE LB-FT (N•M)**		**TORQUE LB-FT (N•M)**		**TORQUE LB-FT (N•M)**		**TORQUE LB-FT (N•M)**	
1/4	20	5	(7)	8	(11)	10	(14)	12	(16)
	28	6	(8)	10	(14)			14	(19)
5/16	18	11	(15)	17	(23)	19	(26)	24	(33)
	24	13	(18)	19	(26)			27	(37)
3/8	16	18	(24)	31	(42)	34	(46)	44	(60)
	24	20	(27)	35	(47)			49	(66)
7/16	14	28	(38)	49	(66)	55	(75)	70	(95)
	20	30	(41)	55	(75)			78	(106)
1 / 2	13	39	(53)	75	(102)	85	(115)	105	(142)
	20	41	(56)	85	(115)			120	(163)
9/16	12	51	(69)	110	(149)	120	(163)	155	(210)
	18	55	(75)	120	(163)			170	(231)
5/8	11	83	(113)	150	(203)	167	(226)	210	(285)
	18	95	(129)	170	(231)			240	(325)
3/4	10	105	(142)	270	(366)	280	(380)	375	(508)
	16	115	(156)	295	(400)			420	(569)
7/8	9	160	(217)	395	(536)	440	(597)	605	(820)
	14	175	(237)	435	(590)			675	(915)
1	8	235	(319)	590	(800)	660	(895)	910	(1,234)
	14	250	(339)	660	(895)			990	(1,342)

M5390045

INSTALLATION AND TORQUING - Continued

Table 4. Torque Limits – Metric Fasteners.

Thread Diameter - Pitch	CLASS 8.8 BOLT	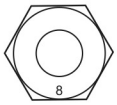 CLASS 8 NUT	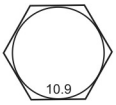 CLASS 10.9 BOLT	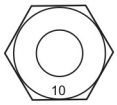 CLASS 10 NUT
	TORQUE: LB - FT (N·m)		TORQUE: LB - FT (N·m)	
M6 M8 M8 x 1	5 (7) 12 (16) 13 (18)		7 (9) 17 (23) 18 (24)	
M10 M10 x 1.25	24 (33) 27 (37)		34 (46) 38 (52)	
M12 M12 x 1.5	42 (57) 43 (58)		60 (81) 62 (84)	
M14 M14 x 1.5	66 (89) 72 (98)		95 (129) 103 (140)	
M16 M16 x 1.5	103 (140) 110 (149)		148 (201) 157 (213)	
M18 M18 x 1.5	147 (199) 165 (224)		203 (275) 229 (310)	
M20 M20 x 1.5	208 (282) 213 (313)		288 (390) 320 (434)	
M22 M22 x 1.5	283 (384) 315 (427)		392 (531) 431 (584)	
M24 M24 x 2	360 (488) 392 (531)		498 (675) 542 (735)	
M27 M27 x 2	527 (715) 569 (771)		729 (988) 788 (1,068)	
M30 M30 x 2	715 (969) 792 (1,074)		990 (1,342) 1,096 (1,486)	

Table 5. Thread Classes.

EXTERNAL	INTERNAL	INTERNAL
1A	1B	Loose Fit
2A	2B	Medium Fit
3A	3B	Close Fit

INSTALLATION AND TORQUING - Continued

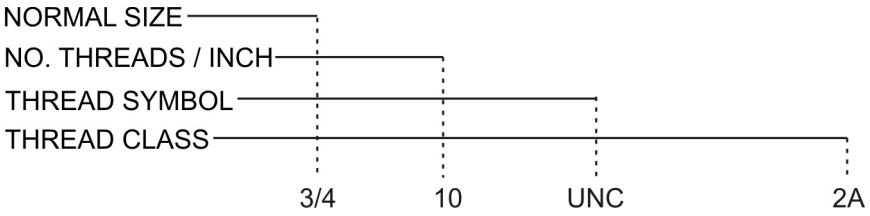

Figure 3. Thread Description.

NOTE

Unless followed by "LH" (e.g., 3/4–10 UNC-2A-LH), threads are right hand.

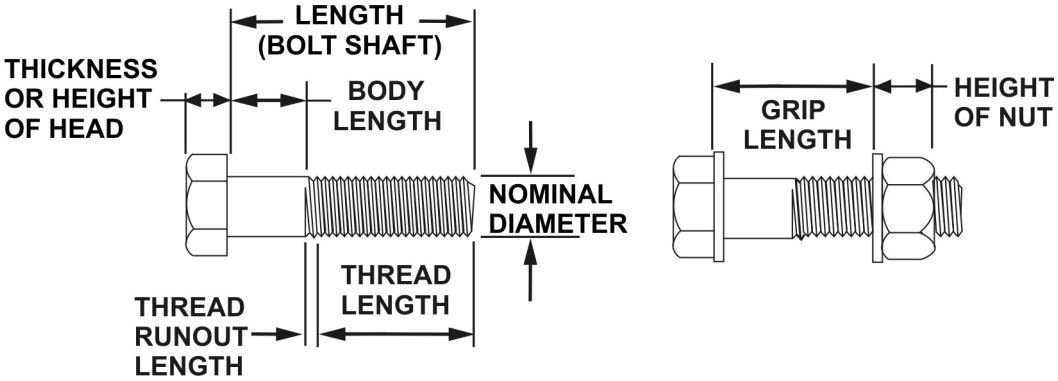

Figure 4. Bolt and Nut Description.

END OF TASK

END OF WORK PACKAGE

FIELD MAINTENANCE
WIRING DIAGRAMS

INITIAL SETUP:

Not Applicable

WARNING

Ensure that intervehicular cable is disconnected from towing vehicle before performing maintenance on electrical system. Failure to follow this warning may result in electrical shock or burns. Failure to comply may result in personnel injury or equipment damage. Seek medical attention in event of injury.

NOTE

- This work package contains the wiring diagram for the M1101 and M1102 trailers. Refer to this diagram when performing troubleshooting or maintenance on the trailer electrical system.
- Wiring lead (37) is not used in this application.
- Wiring lead (90-A) is ground.

Table 1. Trailer Lighting Configuration.

CURBSIDE CIRCUITS		ROADSIDE CIRCUITS	
WIRE NUMBER	**LIGHT AFFECTED**	**WIRE NUMBER**	**LIGHT AFFECTED**
22-460	Service Stoplight and Turn Signal	22-461	Service Stoplight and Turn Signal
24-483	Blackout Taillight and Turn Signal	24-484	Blackout Taillight and Turn Signal
23	Blackout Stoplight	23	Blackout Stoplight
21	Service Taillight, Front, Side, and Rear Marker Lights	21	Service Taillight, Front and Side Marker Lights

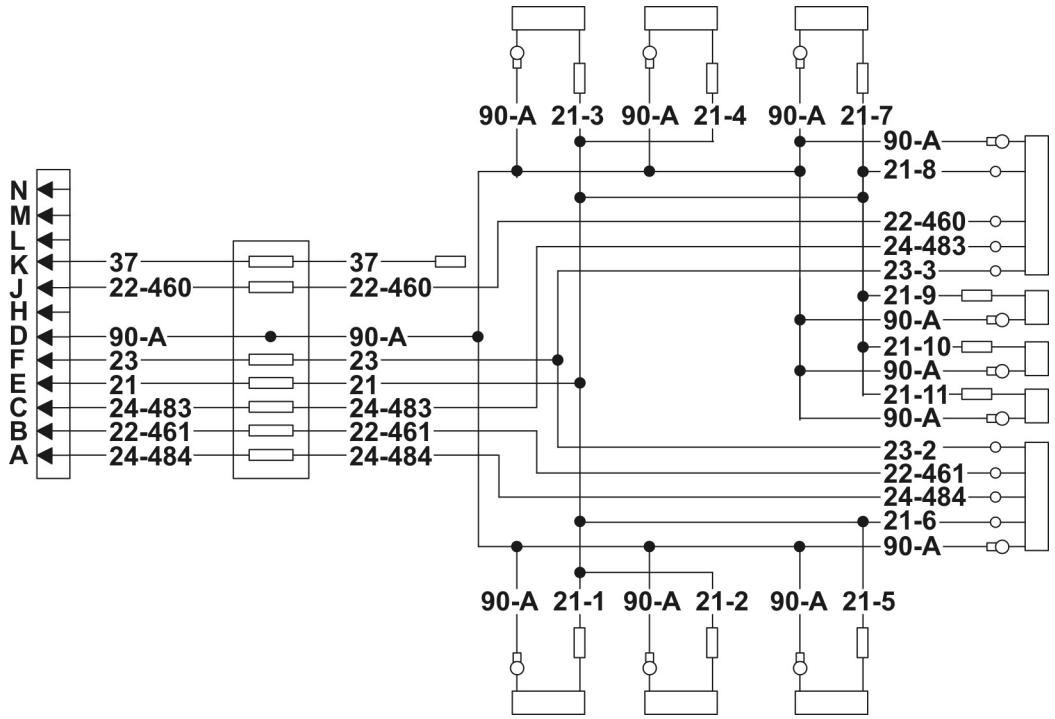

Figure 1. Wiring Diagram.

END OF WORK PACKAGE

CHAPTER 7

PARTS INFORMATION

FIELD MAINTENANCE
REPAIR PARTS AND SPECIAL TOOLS LIST INTRODUCTION

SCOPE

This Repair Parts and Special Tools List (RPSTL) lists and authorizes spares and repair parts; special tools; special test, measurement, and diagnostic equipment (TMDE); and other special support equipment required for performance of operator and field maintenance of the M1101, M1102, and Chassis Trailers. It authorizes the requisitioning, issue, and disposition of spares, repair parts, and special tools as indicated by the source, maintenance, and recoverability (SMR) codes.

GENERAL

In addition to the Introduction work package, this RPSTL is divided into the following work packages.

1. **Repair Parts List Work Packages.** Work packages containing lists of spares and repair parts authorized by this RPSTL for use in the performance of maintenance. These work packages also include parts which must be removed for replacement of the authorized parts. Parts lists are composed of functional groups in ascending alphanumeric sequence, with the parts in each group listed in ascending figure and item number sequence. Sending units, brackets, filters, and bolts are listed with the component they mount on. Bulk materials are listed by item name in FIG. BULK at the end of the work packages. Repair parts kits are listed separately in their own functional group and work package. Repair parts for reparable special tools are also listed in a separate work package. Items listed are shown on the associated illustrations.
2. **Special Tools List Work Packages.** Work packages containing lists of special tools, special TMDE, and special support equipment authorized by this RPSTL (as indicated by Basis of Issue (BOI) information in the DESCRIPTION AND USABLE ON CODE (UOC) column). Tools that are components of common tool sets and/or Class VII are not listed.
3. **Cross-Reference Indexes Work Packages.** There are two cross-reference indexes work packages in this RPSTL: the National Stock Number (NSN) Index work package and the Part Number (P/N) Index work package. The National Stock Number Index work package refers you to the figure and item number. The Part Number Index work package refers you to the figure and item number.

EXPLANATION OF COLUMNS IN THE REPAIR PARTS LIST AND SPECIAL TOOLS LIST WORK PACKAGES

ITEM NO. (Column (1)). Indicates the number used to identify items called out in the illustration.

SMR CODE (Column (2)). The SMR code containing supply/requisitioning information, maintenance level authorization criteria, and disposition instruction, as shown in the following breakout. This entry may be subdivided into four subentries, one for each service.

Table 1. SMR Code Explanation.

Source Code XX	Maintenance Code XX		Recoverability Code X
1st two positions: How to get an item.	3rd position: Who can install, replace, or use the item.	4th position: Who can do complete repair* on the item.	5th position: Who determines disposition action on unserviceable items.

* Complete Repair: Maintenance capacity, capability, and authority to perform all corrective maintenance tasks of the “Repair” function in a use/user environment in order to restore serviceability to a failed item.

Source Code. The source code tells you how to get an item needed for maintenance, repair, or overhaul on an end item/equipment. Explanation of source codes follow:

Source Code	Application/Explanation
PA PB PC PD PE PF PG PH PR PZ	**NOTE** Items coded PC are subject to deterioration. Stock items; use the applicable NSN to requisition/request items with these source codes. They are authorized to the level indicated by the code entered in the third position of the SMR code.
KD KF KB	Items with these codes are not to be requested/requisitioned individually. They are part of a kit which is authorized to the maintenance level indicated in the third position of the SMR code. The complete kit must be requisitioned and applied.
MF-Made at field MH-Made at below depot/sustainment level ML-Made at SRA MD-Made at depot MG-Navy only	Items with these codes are not to be requisitioned/requested individually. They must be made from bulk material which is identified by the part number in the DESCRIPTION AND USABLE ON CODE (UOC) column and listed in the bulk material group work package of the RPSTL. If the item is authorized to you by the third position code of the SMR code, but the source code indicates it is made at higher level, order the item from the higher level of maintenance.
AF-Assembled by field AH-Assembled by below depot sustainment level AL-Assembled by SRA AD-Assembled by depot AG-Navy only	Items with these codes are not to be requested/requisitioned individually. The parts that make up the assembled item must be requisitioned or fabricated and assembled at the level of maintenance indicated by the source code. If the third position of the SMR code authorizes you to replace the item, but the source code indicates the item is assembled at a higher level, order the item from the higher level of maintenance.
XA	Do not requisition an "XA" coded item. Order its next higher assembly. (Refer to NOTE below)
XB	If an item is not available from salvage, order it using the CAGEC and part number.
XC	Installation drawings, diagrams, instruction sheets, field service drawings; identified by manufacturer's part number.
XD	Item is not stocked. Order an XD-coded item through local purchase or normal supply channels using the CAGEC and part number given, if no NSN is available.

NOTE

Cannibalization or controlled exchange, when authorized, may be used as a source of supply for items with the above source codes except for those items source coded "XA" or those aircraft support items restricted by requirements of AR 750-1.

Maintenance Code. Maintenance codes tell you the level(s) of maintenance authorized to use and repair support items. The maintenance codes are entered in the third and fourth positions of the SMR code as follows:

1. **Third Position.** The maintenance code entered in the third position tells you the lowest maintenance level authorized to remove, replace, and use an item. The maintenance code entered in the third position will indicate authorization to the following levels of maintenance:

Maintenance Code	Application/Explanation
F -	Field maintenance can remove, replace, and use the item.
H -	Below Depot Sustainment maintenance can remove, replace, and use the item.
L -	Specialized repair activity can remove, replace, and use the item.
G -	Afloat and ashore intermediate maintenance can remove, replace, and use the item (Navy only).
K -	Contractor facility can remove, replace, and use the item.
Z -	Item is not authorized to be removed, replaced, or used at any maintenance level.
D -	Depot can remove, replace, and use the item.

NOTE

Army may use C in the third position However, for joint service publications, Army will use O.

2. **Fourth Position.** The maintenance code entered in the fourth position tells you whether or not the item is to be repaired and identifies the lowest maintenance level with the capability to do complete repair (perform all authorized repair functions).

NOTE

Some limited repair may be done on the item at a lower level of maintenance, if authorized by the Maintenance Allocation Chart (MAC) and SMR codes.

Maintenance Code	Application/Explanation
F -	Field is the lowest that can do complete repair of the item.
H -	Below Depot Sustainment is the lowest level that can do complete repair of the item.

Maintenance Code	Application/Explanation
L -	Specialized repair activity (SRA) is the lowest level that can do complete repair of the item.
D -	Depot is the lowest level that can do complete repair of the item.
G -	Both afloat and ashore intermediate levels are capable of complete repair of item (Navy only).
K -	Complete repair is done at contractor facility.
Z -	Nonreparable. No repair is authorized.
B -	No repair is authorized. No parts or special tools are authorized for maintenance of "B" coded items. However, the item may be reconditioned by adjusting, lubricating, etc., at the user level.

3. **Recoverability Code.** Recoverability codes are assigned to items to indicate the disposition action on unserviceable items. The recoverability code is shown in the fifth position of the SMR code as follows:

Recoverability Code	Application/Explanation
Z -	Nonreparable item. When unserviceable, condemn and dispose of the item at the level of maintenance shown in the third position of the SMR Code.
F -	Reparable item. When uneconomically reparable, condemn and dispose of the item at field level.
H -	Reparable item. When uneconomically reparable, condemn and dispose of the item at the below depot sustainment level.
D -	Reparable item. When beyond lower level repair capability, return to depot. Condemnation and disposal of item are not authorized below depot level.
L -	Reparable item. Condemnation and disposal not authorized below Specialized Repair Activity (SRA).
A -	Item requires special handling or condemnation procedures because of specific reasons (such as precious metal content, high dollar value, critical material, or hazardous material). Refer to appropriate manuals/ directives for specific instructions.
G -	Field level reparable item. Condemn and dispose at either afloat or ashore intermediate levels (Navy only)
K -	Reparable item. Condemnation and disposal to be performed at contractor facility.

NSN (Column (3)). The NSN for the item is listed in this column.

CAGEC (Column (4)). The Commercial and Government Entity Code (CAGEC) is a five-digit code which is used to identify the manufacturer, distributor, or Government agency/activity that supplies the item.

PART NUMBER (Column (5)). Indicates the primary number used by the manufacturer (individual, company, firm, corporation, or Government activity), which controls the design and characteristics of the item by means of its engineering drawings, specifications, standards, and inspection requirements to identify an item or range of items.

NOTE

When you use an NSN to requisition an item, the item you receive may have a different part number from the number listed.

DESCRIPTION AND USABLE ON CODE (UOC) (Column (6)). This column includes the following information:

1. The federal item name, and when required, a minimum description to identify the item.
2. Part numbers of bulk materials are referenced in this column in the line entry to be manufactured or fabricated.
3. Hardness Critical Item (HCI). A support item that provides the equipment with special protection from electromagnetic pulse (EMP) damage during a nuclear attack.
4. The statement END OF FIGURE appears just below the last item description in Column 6 for a given figure in both the repair parts list and special tools list work packages.

QTY (Column (7)). The QTY (quantity per figure) column indicates the quantity of the item used in the breakout shown on the illustration/figure, which is prepared for a functional group, subfunctional group, or an assembly. A "V" appearing in this column instead of a quantity indicates that the quantity is variable and quantity may change from application to application.

EXPLANATION OF CROSS-REFERENCE INDEXES WORK PACKAGES FORMAT AND COLUMNS

1. **National Stock Number (NSN) Index Work Package.** NSNs in this index are listed in National Item Identification Number (NIIN) sequence.

STOCK NUMBER Column. This column lists the NSN in NIIN sequence. The NIIN consists of the last nine digits of the NSN. When using this column to locate an item, ignore the first four digits of the NSN. However, the complete NSN should be used when ordering items by stock number. For example, if the NSN is 5385-01-574-1476, the NIIN is 01-574-1476.
FIG. Column. This column lists the number of the figure where the item is identified/located. The figures are in numerical order in the repair parts list and special tools list work packages.
ITEM Column. The item number identifies the item associated with the figure listed in the adjacent FIG. column. This item is also identified by the NSN listed on the same line.

2. **Part Number (P/N) Index Work Package.** Part numbers in this index are listed in ascending alphanumeric sequence (vertical arrangement of letter and number combinations which places the first letter or digit of each group in order A through Z, followed by the numbers 0 through 9 and each following letter or digit in like order).

PART NUMBER Column. Indicates the part number assigned to the item.
FIG. Column. This column lists the number of the figure where the item is identified/located in the repair parts list and special tools list work packages.
ITEM Column. The item number is the number assigned to the item as it appears in the figure referenced in the adjacent figure number column.

SPECIAL INFORMATION

1. **UOC.** The UOC appears in the lower left corner of the Description Column heading. Usable on codes are shown as "UOC:..." in the Description Column (justified left) on the first line under the applicable item/ nomenclature. Uncoded items are applicable to all models. Identification of the UOCs used in the RPSTL are:

Code	Used On
CMT	Trailer Chassis
HMT	Cargo Trailer M1102
LMT	Cargo Trailer M1101

2. **Fabrication Instructions.** Bulk materials required to manufacture items are listed in the bulk material functional group of this RPSTL. Part numbers for bulk material are also referenced in the Description column of the line item entry for the item to be manufactured/fabricated. Detailed fabrication instructions for items source coded to be manufactured or fabricated are found in this TM.

3. **Index Numbers.** Items which have the word BULK in the Figure column will have an index number shown in the Item Number column. This index number is a cross-reference between the NSN / Part Number (P/N) Index work packages and the bulk material list in the repair parts list work package.

HOW TO LOCATE REPAIR PARTS

1. When NSNs or Part Numbers Are Not Known.

First. Using the Table of Contents, determine the assembly group to which the item belongs. This is necessary since figures are prepared for assembly groups and subassembly groups, and lists are divided into the same groups.
Second. Find the figure covering the functional group or the subfunctional group to which the item belongs.
Third. Identify the item on the figure and note the number(s).
Fourth. Look in the repair parts list work packages for the figure and item numbers. The NSNs and part numbers are on the same line as the associated item numbers.

2. When NSN is Known.

First. If you have the NSN, look in the STOCK NUMBER column of the NSN index work package. The NSN is arranged in NIIN sequence. Note the figure and item number next to the NSN.
Second. Turn to the figure and locate the item number. Verify that the item is the one you are looking for.

3. When Part Number Is Known.

First. If you have the part number and not the NSN, look in the PART NUMBER column of the part number index work package. Identify the figure and item number.
Second. Look up the item on the figure in the applicable repair parts list work package.

LIST OF ABBREVIATIONS

NOTE

Refer to ASME Y14.38 for standard abbreviations.

ABBREVIATION	DEFINITION
NIIN	National Item Identification Number
RPSTL	Repair Parts and Special Tools List
SMR	Source, Maintenance, and Recoverability Code
TMDE	Test, Measurement, and Diagnostic Equipment

END OF WORK PACKAGE

FIELD MAINTENANCE
WIRING HARNESS CLIP

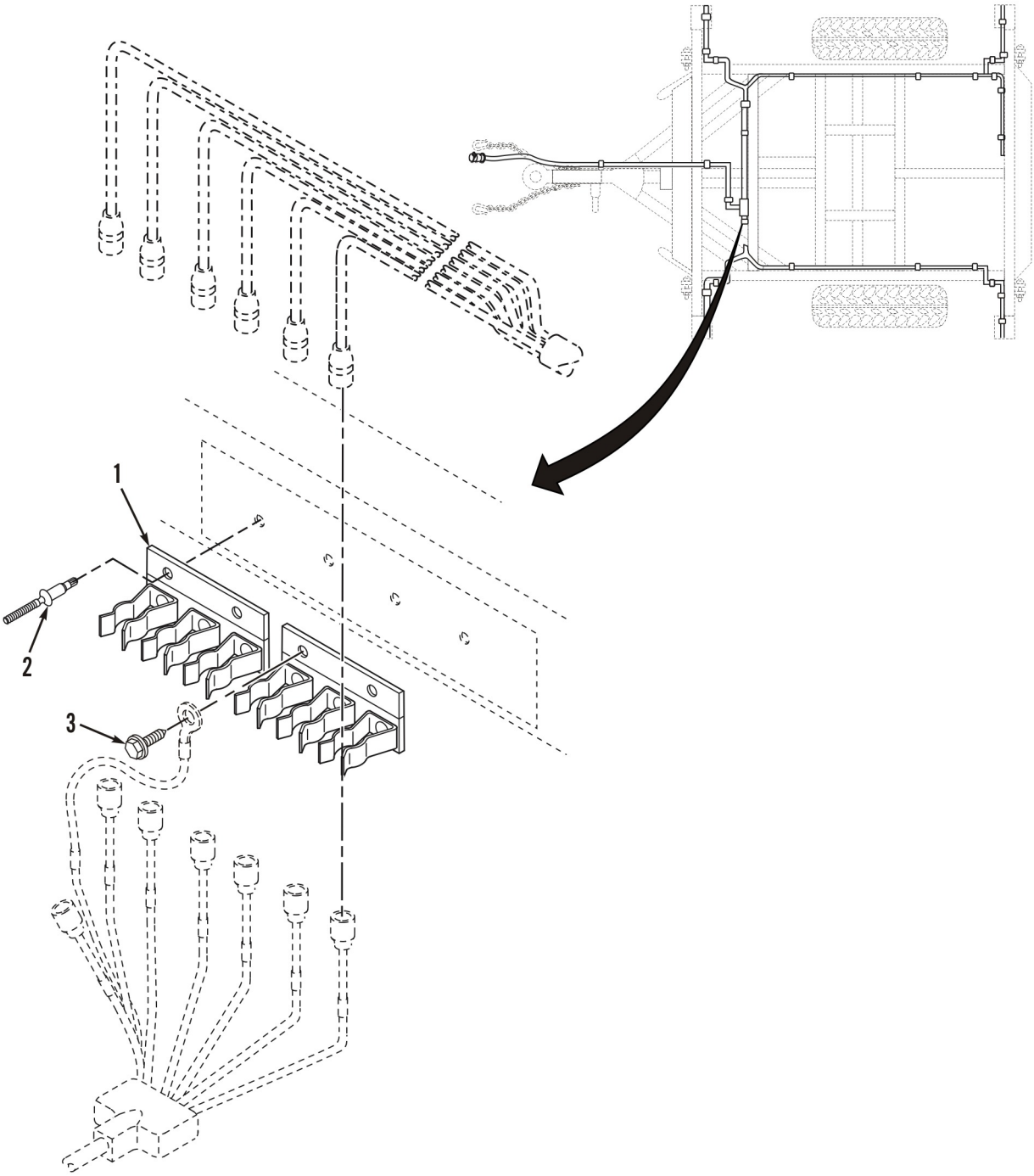

Figure 1. Wiring Harness Clip.

(1) ITEM NO.	(2) SMR CODE	(3) NSN	(4) CAGEC	(5) PART NUMBER	(6) DESCRIPTION AND USABLE ON CODE (UOC)	(7) QTY
					GROUP 0608 MISCELLANEOUS ITEMS	
					FIG. 1 WIRING HARNESS CLIP.	
1	PAFZZ	5340-00-611-7883	19207	8747908	STRAP,RETAINING.....	2
2	PAFZZ	5320-01-453-9377	9K475	MBP-R8-M7	RIVET,BLIND.....	3
3	PAFZZ	5305-01-269-1484	39428	90054A291	SCREW,TAPPING.....	1
					END OF FIGURE	

FIELD MAINTENANCE
TAIL LIGHTS

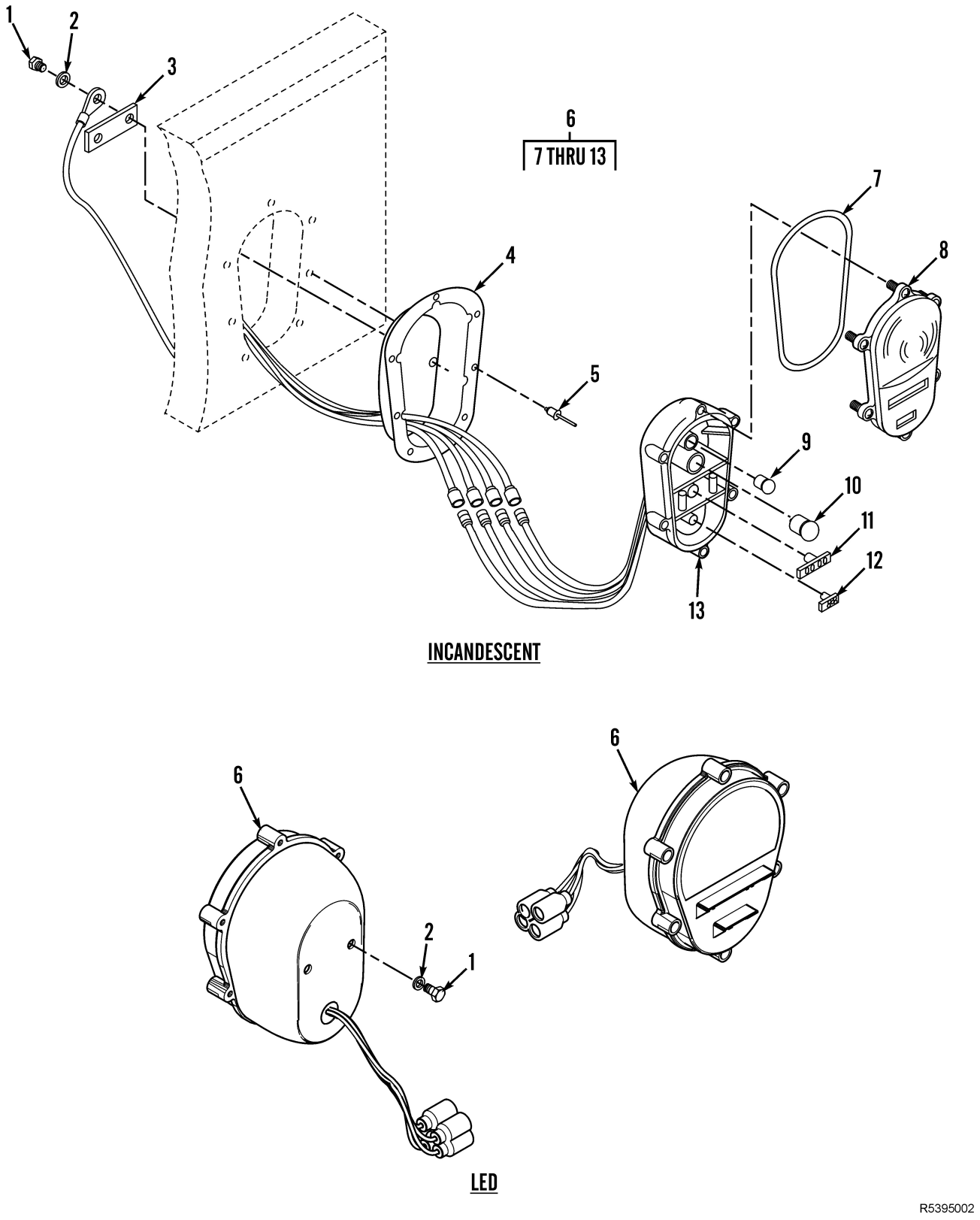

Figure 2. Tail Lights.

(1) ITEM NO.	(2) SMR CODE	(3) NSN	(4) CAGEC	(5) PART NUMBER	(6) DESCRIPTION AND USABLE ON CODE (UOC)	(7) QTY
					GROUP 0609 LIGHTS	
					FIG. 2 TAIL LIGHTS.	
1	PAFZZ	5305-00-543-4372	80204	B1821BH038C075N	SCREW,CAP,HEXAGON H.....	4
2	PAFZZ	5310-00-274-8041	06853	204235	WASHER,FLAT.....	4
3	PAFZZ	6150-01-417-7502	01084	7214	BUS,CONDUCTOR.....	2
4	PAFZZ	5342-01-194-3128	19207	12338711	BRACKET.....	2
5	PAFZZ	5320-01-414-2171	11815	BAPK-69	RIVET,BLIND .198 DIA X .562-.575 GRIP.	16
6	PAFZZ	6220-01-482-6105	19207	12422958	STOPLIGHT,VEHICULAR SEALED,LED....	2
6	PAFFF	6220-01-372-3883	19207	12375837	TAILLIGHT,VEHICULAR.....	2
7	PAFZZ	5331-00-462-0907	19207	11639519-2	. O-RING.....	1
8	PAFZZ	6220-01-359-2870	19207	12375841	. LENS,LIGHT.....	1
9	PAFZZ	6240-00-019-3093	58536	AA52463-A09	. LAMP,INCANDESCENT.....	1
10	PAFZZ	6240-00-044-6914	08108	1683	. LAMP,INCANDESCENT.....	1
11	PAFZZ	6220-01-284-2709	19207	12360850-1	. LIGHT,MARKER,CLEARA.....	1
12	PAFZZ	6220-01-297-3217	19207	12360870-2	. STOP LIGHT,VEHICULA.....	1
13	XAFZZ		34623	12375838	. ASSEMBLY,BODY.....	1

END OF FIGURE

FIELD MAINTENANCE
CLEARANCE LIGHTS

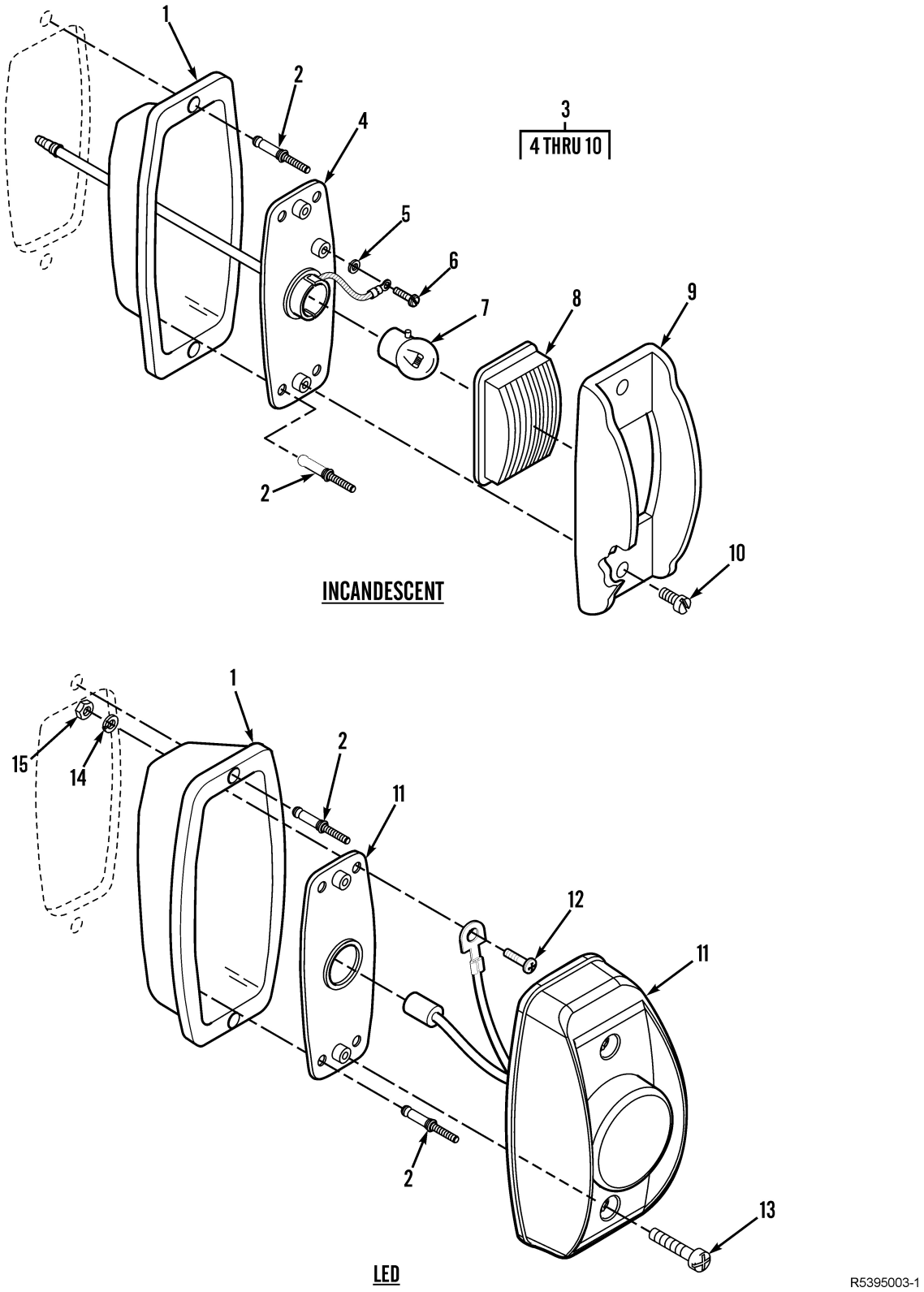

Figure 3. Clearance Lights (Sheet 1 of 3).

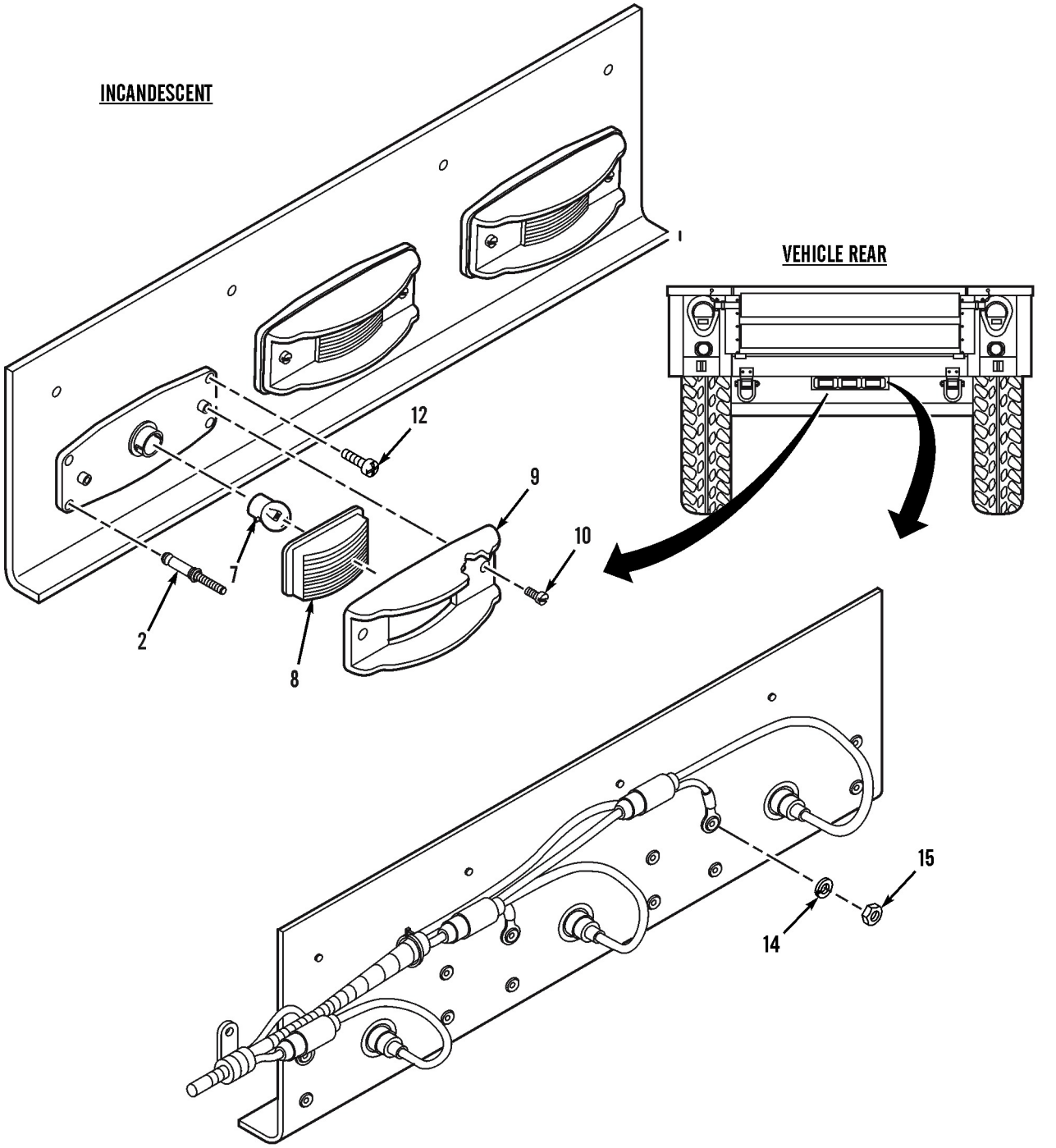

Figure 3. Clearance Lights (Sheet 2 of 3).

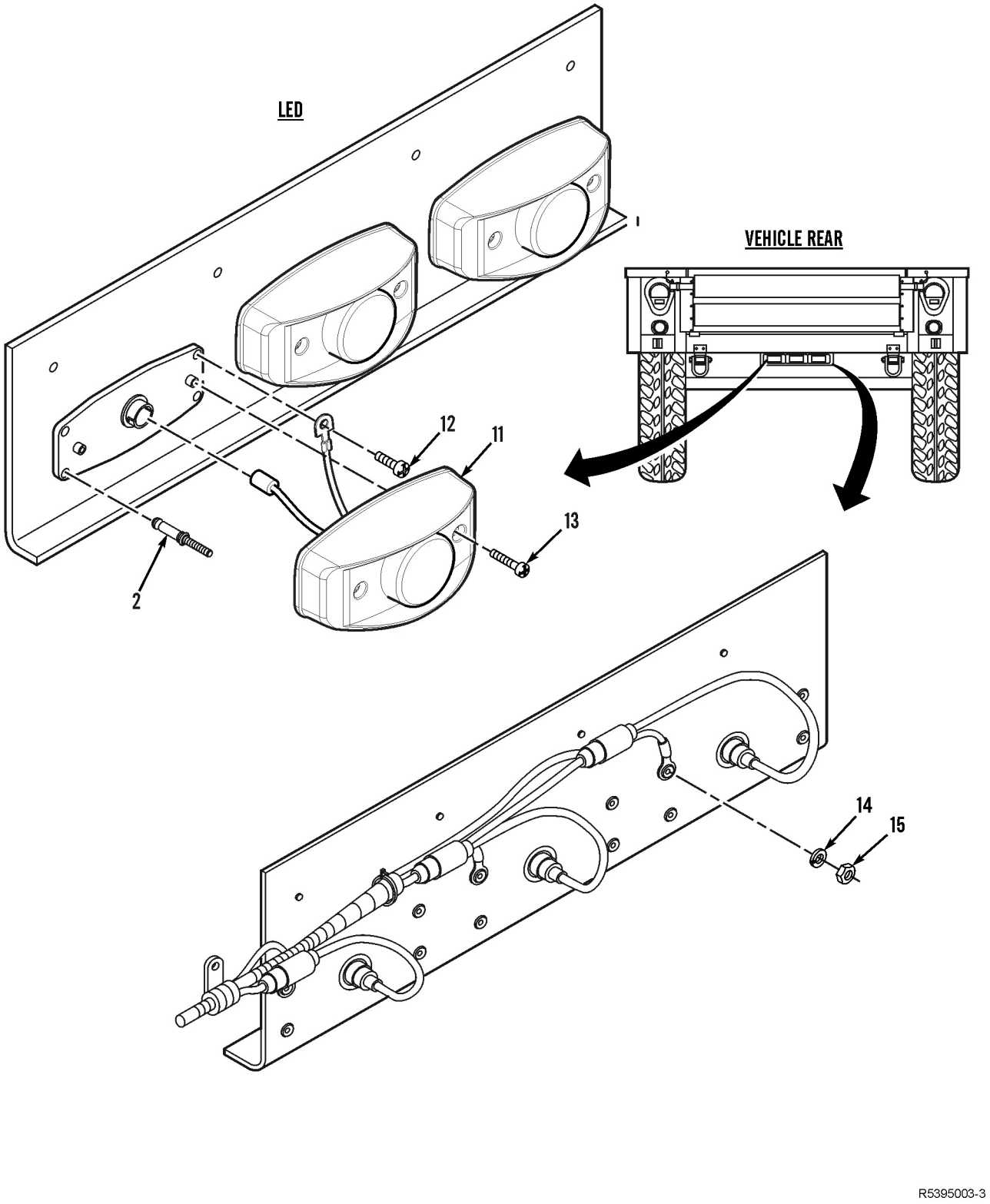

Figure 3. Clearance Lights (Sheet 3 of 3).

(1) ITEM NO.	(2) SMR CODE	(3) NSN	(4) CAGEC	(5) PART NUMBER	(6) DESCRIPTION AND USABLE ON CODE (UOC)	(7) QTY
					GROUP 0609 LIGHTS	
					FIG. 3 CLEARANCE LIGHTS.	
1	PAFZZ	6220-01-200-0897	19207	12338709	HOUSING,LIGHT	6
2	PAFZZ	5320-01-414-2171	11815	BAPK-69	RIVET,BLIND .198 DIA X .562-.575 GRIP.	48
3	PAFFF	6220-00-726-1916	96906	MS35423-2	LIGHT,MARKER,CLEARA RED	5
3	PAFZZ	5980-01-443-9093	19207	12446845-2	LIGHT EMITTING DIOD SEALED,RED	5
4	PAFZZ	6250-00-729-9295	96906	MS35422-1	. LAMPHOLDER	1
5	PAFZZ	5310-01-303-4701	96906	MS51412-1	. WASHER,FLAT 5/32 ID X 3/8 OD X 3/64 THK	1
6	PAFZZ	5305-00-082-8440	96906	MS3212-13	. SCREW,MACHINE 6-32 X 3/8	1
7	PAFZZ	6240-00-019-0877	58536	AA52463-A08	. LAMP,INCANDESCENT	1
8	PAFZZ	6220-00-299-7426	96906	MS35421-2	. LENS,LIGHT	1
9	PAFZZ	6220-00-752-6516	73331	5939830	. RETAINER,LENS	1
10	PAFZZ	5305-00-701-5071	96906	MS51959-61	. SCREW,MACHINE 10-24 X 3/8	2
11	PAFZZ	6220-01-418-4404	19207	12446845-1	LIGHT,INDICATOR SEALED,AMBER	4
11	PAFFF	6220-00-577-3434	96906	MS35423-1	LIGHT,MARKER,CLEARA AMBER	4
12	PAFZZ	5305-00-984-6212	80205	MS35206-265	SCREW,MACHINE 10-24 X 3/4	1
13	PAFZZ	5305-00-989-7435	80205	MS35207-264	SCREW,MACHINE 10-32 X 5/8	2
14	PAFZZ	5310-00-043-1680	96906	MS51415-3	WASHER,LOCK #10	1
15	PAFZZ	5310-00-934-9760	80205	MS35649-204	NUT,PLAIN,HEXAGON 10-24	1

END OF FIGURE

FIELD MAINTENANCE
WIRING HARNESS, BRANCHED

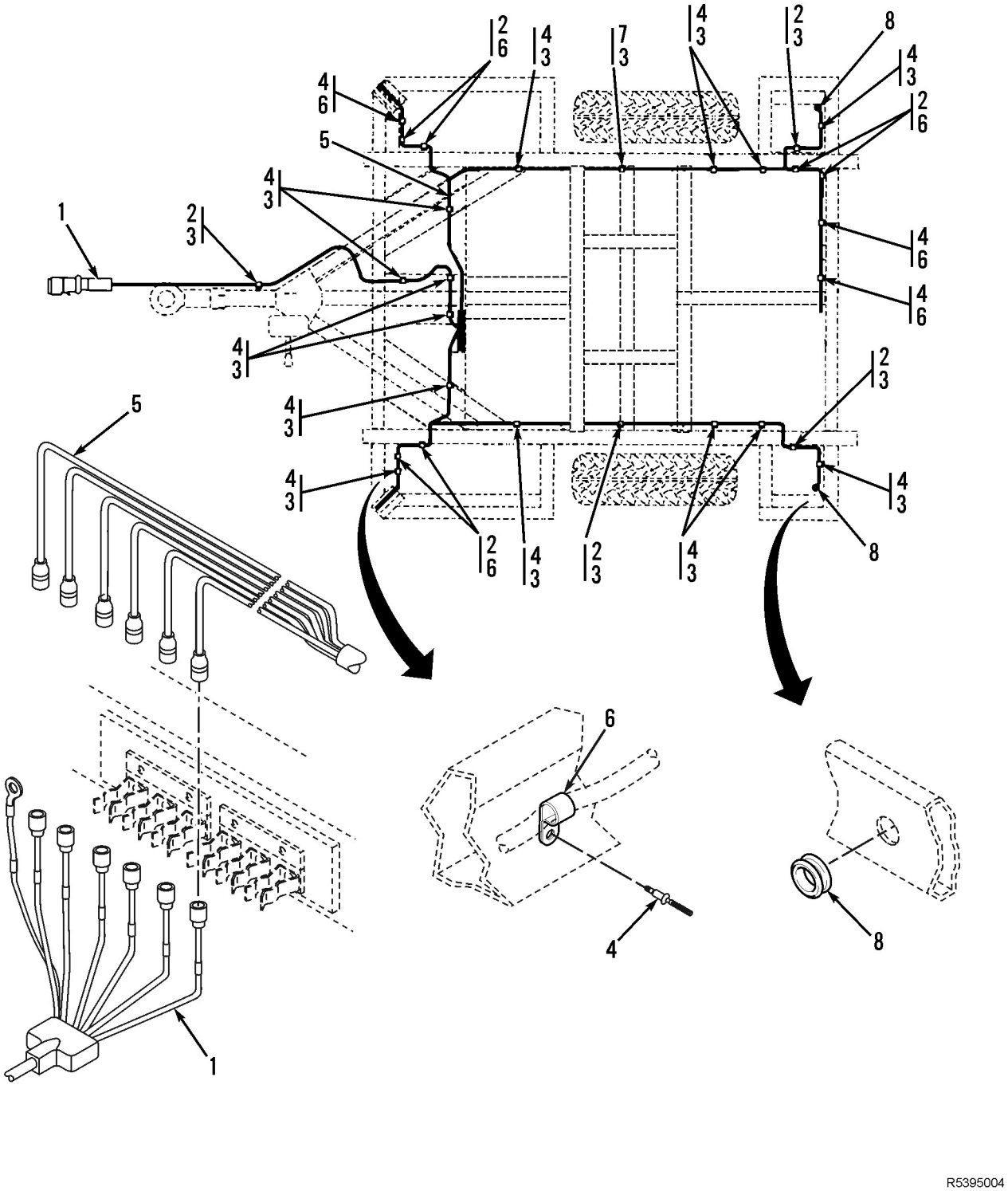

Figure 4. Wiring Harness, Branched.

(1) ITEM NO.	(2) SMR CODE	(3) NSN	(4) CAGEC	(5) PART NUMBER	(6) DESCRIPTION AND USABLE ON CODE (UOC)	(7) QTY
					GROUP 0613 HULL OR CHASSIS WIRING HARNESS	
					FIG. 4 WIRING HARNESS, BRANCHED.	
1	PAFZZ	6150-01-167-6522	19207	10891263-1	CABLE ASSEMBLY,SPEC.....	1
2	PAFZZ	5320-01-412-8088	17446	BOM-R8-9	RIVET,BLIND .250 DIA X .532-.594 GRIP.	10
3	PAFZZ	5340-01-414-2172	18076	12449366-3	CLAMP,LOOP 3/4 DIA.....	19
4	PAFZZ	5320-01-414-1459	9K475	MBP-R8-M8	RIVET,BLIND .250 DIA X .110-.189 GRIP.	41
5	PFFZZ	6150-01-485-1459	19207	12449997	WIRING HARNESS,BRAN CHASSIS UOC: CMT	1
5	PFFZZ	6150-01-413-3481	01084	7536	WIRING HARNESS,BRAN CARGO UOC: HMT,LMT	1
6	PAFZZ	5340-01-414-1453	19207	12449366-2	CLAMP,LOOP 1/2 DIA.....	10
7	PAFZZ	5320-01-140-1479	9K475	BOM-R8-10	RIVET,BLIND .250 DIA X .595-.656 GRIP...	2
8	PCFZZ	5325-00-276-6056	94135	MS35489-106	GROMMET,NONMETALLIC.....	4

END OF FIGURE

FIELD MAINTENANCE
AXLE ASSEMBLY

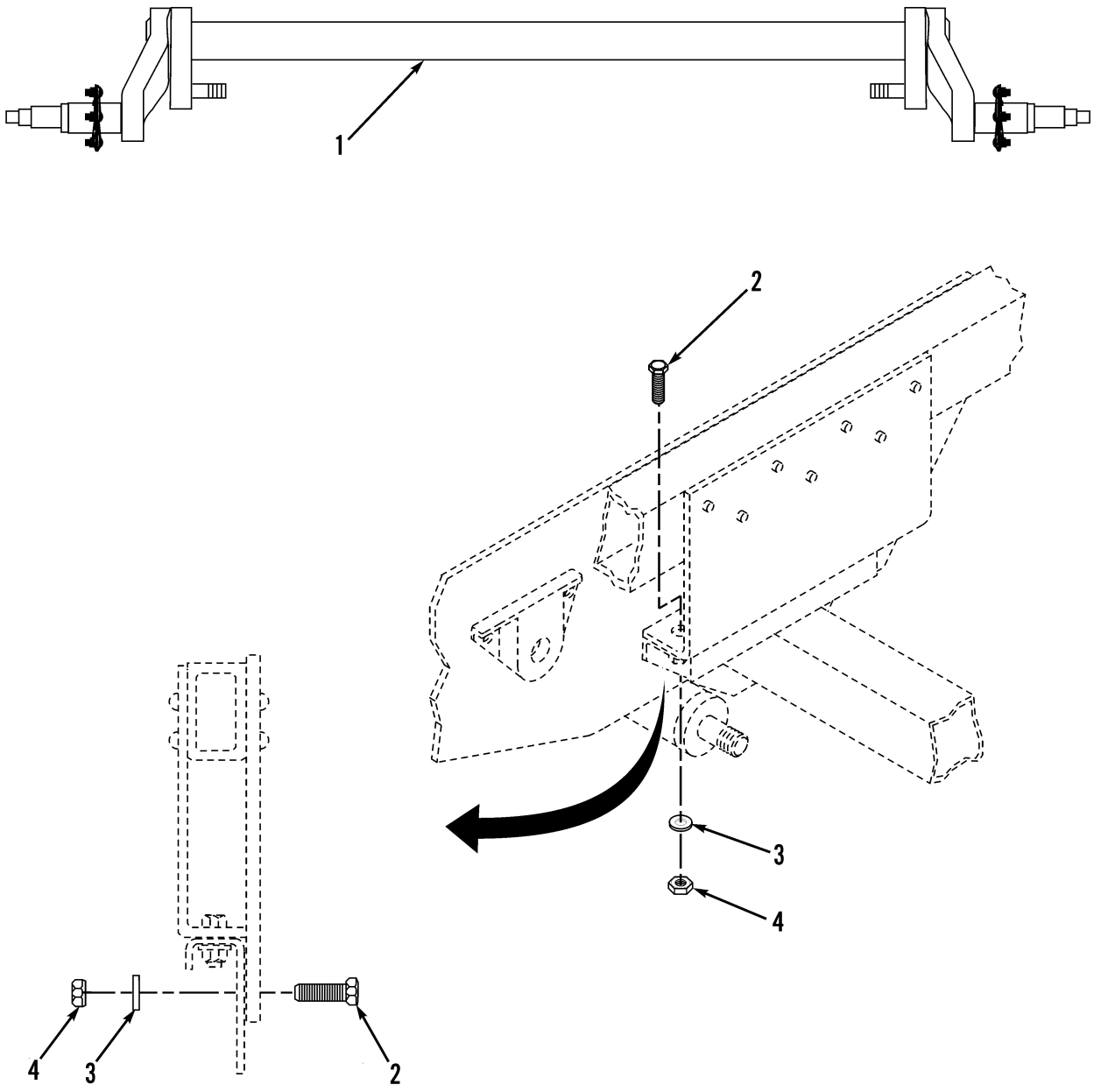

Figure 5. Axle Assembly.

(1) ITEM NO.	(2) SMR CODE	(3) NSN	(4) CAGEC	(5) PART NUMBER	(6) DESCRIPTION AND USABLE ON CODE (UOC)	(7) QTY
					GROUP 1000 FRONT AXLE ASSEMBLY	
					FIG. 5 AXLE ASSEMBLY.	
1	PAFZZ	2530-01-420-9983	0Z890	094231	AXLE,VEHICULAR,NOND.....	1
2	PAFZZ	5305-00-724-7220	80204	B1821BH063C150N	SCREW,CAP,HEXAGON H 5/8-11 X 1.500.	8
3	PAFZZ	5310-01-416-6520	19207	12449379-6	WASHER,FLAT 11/16 ID X 1 5/16 OD X 5/32 THK.....	12
4	PAFZZ	5310-01-530-1545	0Y3H3	37272	NUT,SELF-LOCKING,HE 5/8-11.....	8
					END OF FIGURE	

FIELD MAINTENANCE
HANDBRAKES

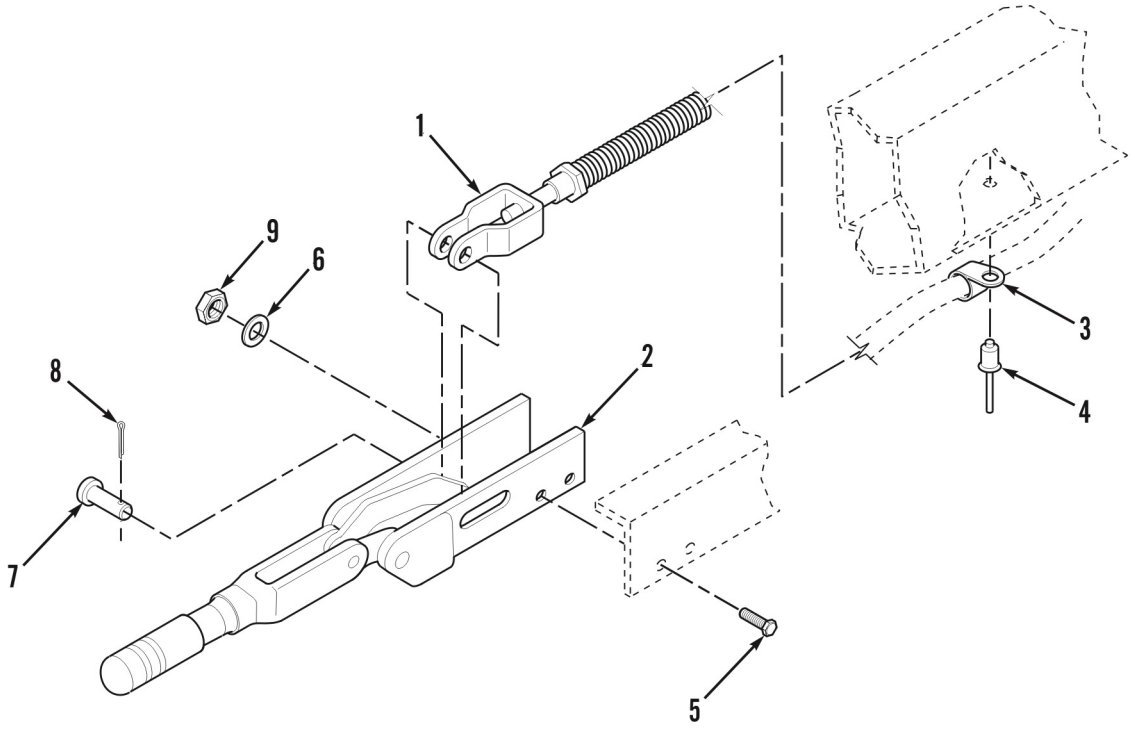

R5395006

Figure 6. Handbrakes.

(1) ITEM NO.	(2) SMR CODE	(3) NSN	(4) CAGEC	(5) PART NUMBER	(6) DESCRIPTION AND USABLE ON CODE (UOC)	(7) QTY
					GROUP 1201 HAND BRAKES	
					FIG. 6 HANDBRAKES.	
1	PAFZZ	2530-01-414-9307	92867	15642901	CABLE AND CONDUIT A.....	2
2	PAFZZ	2510-01-415-2636	92867	01191510	LEVER,ACCELERATOR HAND BRAKE.....	2
3	PAFZZ	5340-01-486-2862	19207	12449366-6	CLAMP,LOOP 1/4 DIA.....	4
4	PAFZZ	5320-01-414-1459	9K475	MBP-R8-M8	RIVET,BLIND .250 DIA X .110-.189 GRIP...	4
5	PAFZZ	5306-00-226-4832	80204	B1821BH031C175N	BOLT,MACHINE.....	4
6	PAFZZ	5310-00-081-4219	96906	MS27183-12	WASHER,FLAT.....	4
7	PAFZZ	5315-00-584-9053	92867	81000129	PIN,STRAIGHT,HEADED.....	2
8	PAFZZ	5315-01-372-8923	92867	84000139	PIN,COTTER.....	2
9	PAFZZ	5310-01-412-1774	19207	12449377-9	NUT,SELF-LOCKING,HE.....	4
					END OF FIGURE	

FIELD MAINTENANCE
SERVICE BRAKES

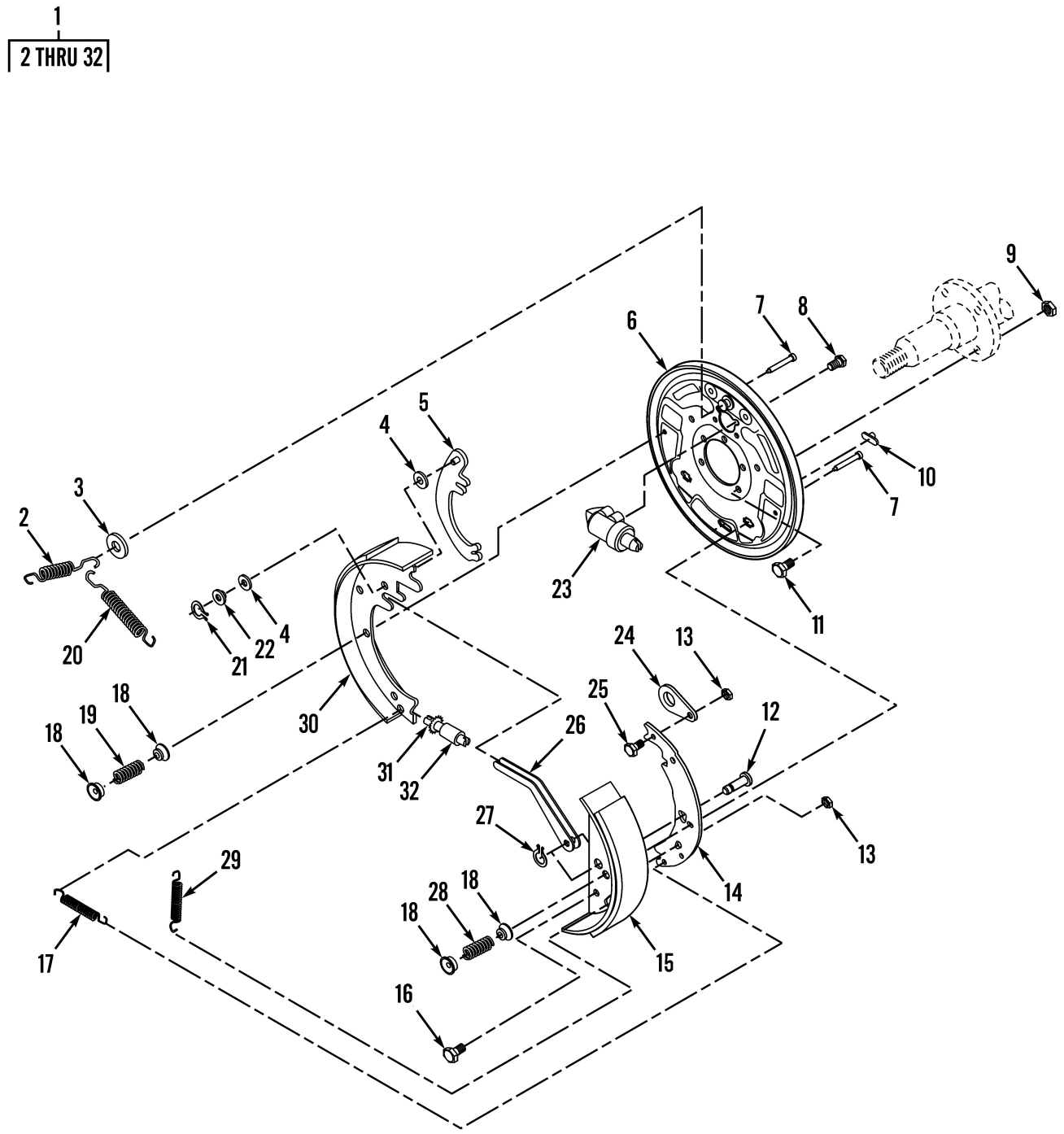

Figure 7. Service Brakes.

(1) ITEM NO.	(2) SMR CODE	(3) NSN	(4) CAGEC	(5) PART NUMBER	(6) DESCRIPTION AND USABLE ON CODE (UOC)	(7) QTY
					GROUP 1202 SERVICE BRAKES	
					FIG. 7 SERVICE BRAKES.	
1	PAFFF	2530-01-414-9314	1CSL0	2026020-2	BRAKE,SHOE TYPE ASSEMBLY,LH.....	1
1	PAFFF	2530-01-414-9317	1CSL0	2026020-1	BRAKE,SHOE TYPE ASSEMBLY,RH.....	1
2	PAFZZ	5360-01-288-5870	1TUY2	0978600	. SPRING,HELICAL,EXTE.....	1
3	PAFZZ	5310-01-412-0861	1TUY2	18950	. WASHER,FLAT.....	2
4	PAFZZ	5330-01-269-7265	1TUY2	7820	. WASHER,TRANSPORTER.....	2
5	PAFZZ	2530-01-320-1687	1TUY2	0953700	. LINK,PARKING BRAKEC USED ON P/N 2026020-2 ONLY.....	1
5	PAFZZ	2530-01-320-1686	1TUY2	4486500	. LINK,PARKING BRAKEC USED ON P/N 2026020-1 ONLY.....	1
6	PFFZZ	2530-01-287-6869	1TUY2	4485900042	. PLATE,BACKING,BRAKE.....	1
7	PAFZZ	5315-01-287-8770	1TUY2	18508	. PIN,TOGGLE,HEADED.....	2
8	PAFZZ	5305-01-321-3522	1TUY2	23457	. SCREW ASSEMBLY,PANE.....	2
9	PAFZZ	5310-01-484-0489	19207	12449377-5	. NUT,SELF-LOCKING,HE.....	5
10	PAFZZ	5340-00-714-3113	7X677	1455658	. COVER,ACCESS.....	1
11	PAFZZ	5305-00-269-3240	80204	B1821BH038F150N	. SCREW,CAP,HEXAGON H.....	5
12	PFFZZ	5315-01-598-2416	20076	4438300	. PIN,SHOULDER,HEADED.....	1
13	PAFZZ	5310-01-320-1980	1TUY2	17406	. NUT,SELF-LOCKING,HE.....	2
14	PAFZZ	5340-01-412-1285	1CLS0	2109052	. LEVER,MANUAL CONTRO.....	1
15	PAFZZ	2530-01-530-5068	1CSL0	2026023	. BRAKE SHOE SET.....	2
16	PAFZZ	5305-01-412-6287	1TUY2	12972	. SCREW,CAP,HEXAGON H.....	1
17	PAFZZ	5360-01-320-5815	1TUY2	9784	. SPRING,HELICAL,COMP.....	1
18	PAFZZ	2530-01-263-7061	1TUY2	0978900	. CUP,HYDRAULIC BRAKE.....	4
19	PAFZZ	5360-01-287-7297	1TUY2	9791	. SPRING,HELICAL,COMP.....	1
20	PAFZZ	5360-01-320-5818	1TUY2	9785	. SPRING,HELICAL,EXTE.....	1
21	PAFZZ	5340-01-277-0300	1TUY2	9795	. CLIP,SPRING TENSION.....	1
22	PAFZZ	5310-01-466-0901	1TUY2	9794	. WASHER,SPRING TENSI.....	1
23	PAFZZ	2530-00-161-7576	1TUY2	9777	. CYLINDER ASSEMBLY,H LH USED ON P/N 2026020-2 ONLY.....	1
23	PAFZZ	2530-00-161-7575	1TUY2	9776	. CYLINDER ASSEMBLY,H RH USED ON P/N 2026020-1 ONLY.....	1
24	PAFZZ	2530-01-412-5209	1TUY2	17917	. LINK,ACTUATING BRAK.....	1
25	PAFZZ	5306-01-100-5113	1TUY2	0794900	. BOLT.....	1
26	PAFZZ	2530-01-412-5210	1TUY2	44863	. LINK,ACTUATING BRAK USED ON P/N 2026020-1 ONLY.....	1

(1) ITEM NO.	(2) SMR CODE	(3) NSN	(4) CAGEC	(5) PART NUMBER	(6) DESCRIPTION AND USABLE ON CODE (UOC)	(7) QTY
26	PAFZZ	2530-01-412-5211	1TUY2	44864	. LINK,ACTUATING BRAK USED ON P/N 2026020-2 ONLY.....	1
27	PAFZZ	5325-01-412-5998	1TUY2	0777801184	. RING,RETAINING.....	1
28	PAFZZ	5360-01-320-5819	1TUY2	9790	. SPRING,HELICAL,EXTE.....	1
29	PAFZZ	5360-01-320-5820	1TUY2	6814	. SPRING,HELICAL,EXTE.....	1
30	KFFZZ		1TUY2	18503	. BRAKE,SHOE TYPE PART OF KIT P/N 2026023, PART OF KIT P/N	1
31	PAFZZ	2530-01-287-9409	1TUY2	18836	. SOCKET,BRAKE ADJUST.....	1
32	PAFZZ	2530-01-288-3979	1TUY2	23323	. ADJUSTING SCREW ASS.....	1

END OF FIGURE

FIELD MAINTENANCE
BRAKE ACTUATOR ASSEMBLY

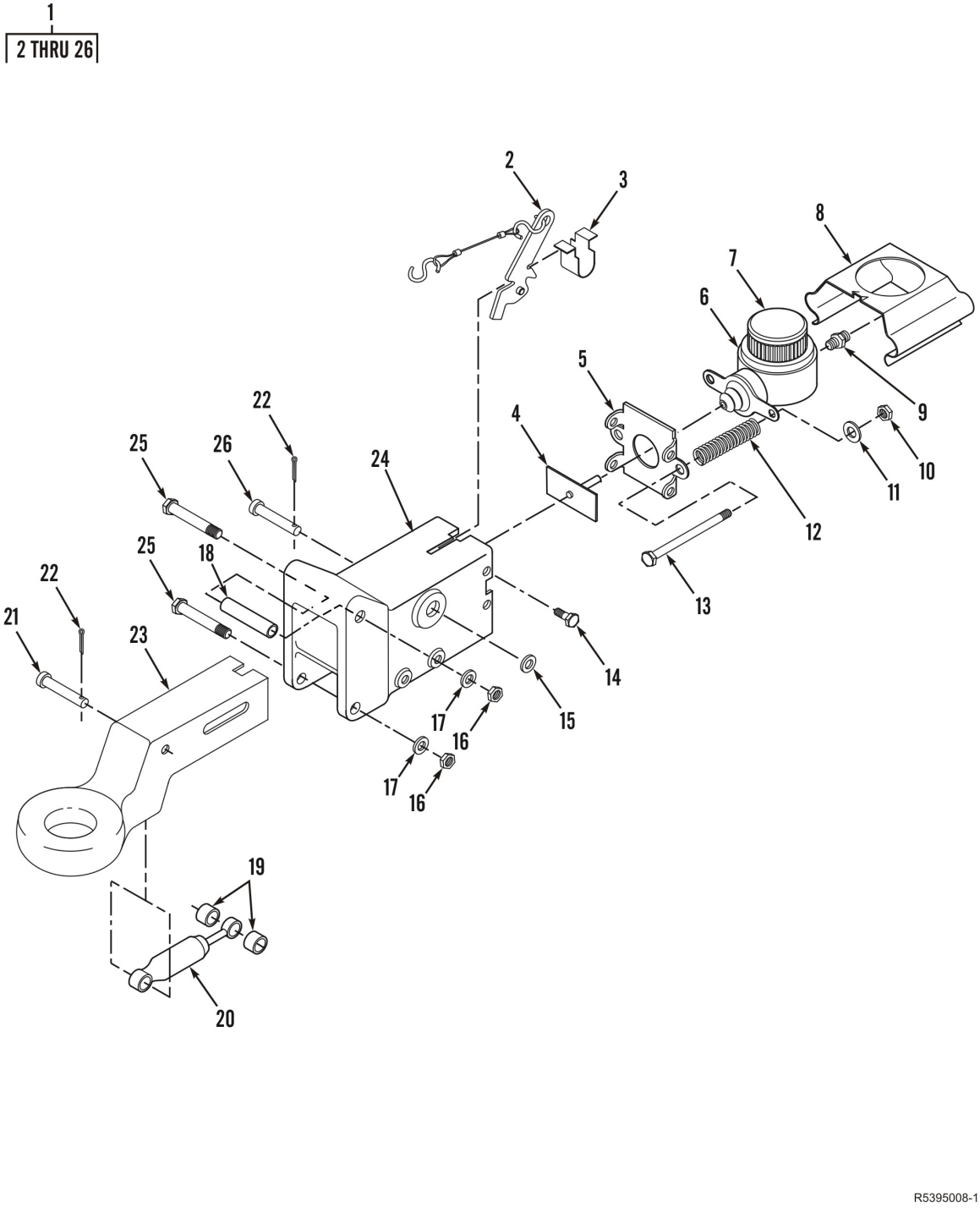

Figure 8. Brake Actuator Assembly (Sheet 1 of 2).

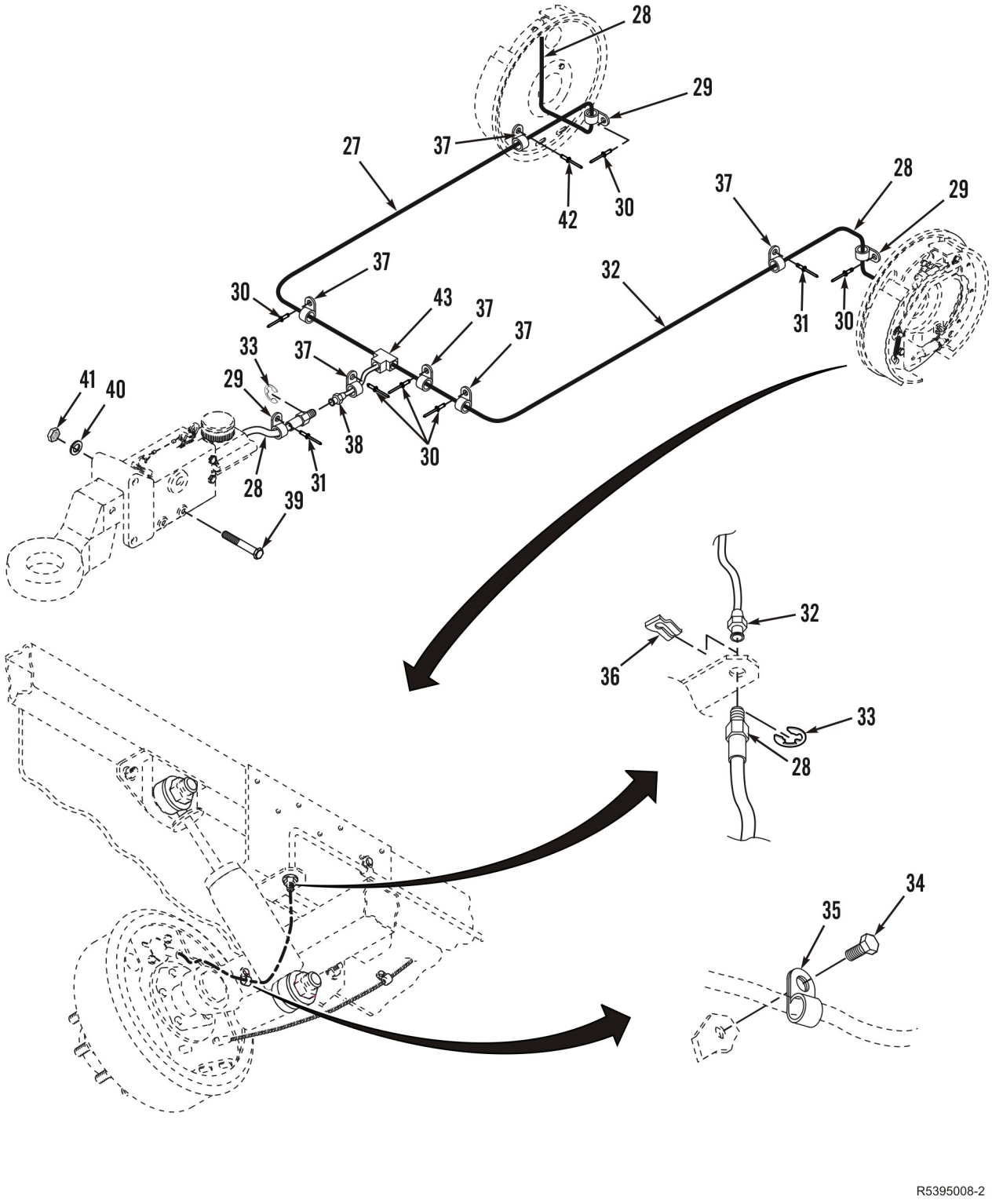

Figure 8. Brake Actuator Assembly (Sheet 2 of 2).

(1) ITEM NO.	(2) SMR CODE	(3) NSN	(4) CAGEC	(5) PART NUMBER	(6) DESCRIPTION AND USABLE ON CODE (UOC)	(7) QTY
					GROUP 1204 HYDRAULIC BRAKE SYSTEM	
					FIG. 8 BRAKE ACTUATOR ASSEMBLY.	
1	PBFFF	2590-01-493-7898	19207	12479800	ACTUATOR,HYDRAULIC-.....	1
2	PAFZZ	5340-01-496-9412	19207	12479780	. LEVER,LOCK-RELEASE.....	1
3	PFFZZ	5360-01-269-7266	1TUY2	17803	. SPRING,BREAKAWAY TR.....	1
4	PAFZZ	2530-01-412-3863	1TUY2	4390500	. PUSH ROD,HYDRAULICB.....	1
5	PAFZZ	5340-01-412-1281	1TUY2	17762	. PLATE,MOUNTING.....	1
6	PAFZZ	2530-01-121-0786	20076	10271	. CYLINDER ASSEMBLY,H.....	1
7	PAFZZ	5340-01-549-5983	08SN2	1755600	. CAP,FILLER OPENING (WITH GASKET).	1
8	PAFZZ	5340-01-412-1284	1TUY2	1806600317	. COVER,ACCESS.....	1
9	PAFZZ	4730-01-412-6769	1TUY2	12098	. RESTRICTOR,FLUID FL.....	1
10	PAFZZ	5310-01-100-5112	66200	7976	. NUT.....	2
11	PAFZZ	5330-01-269-7265	1TUY2	7820	. WASHER,TRANSPORTER.....	2
12	PAFZZ	5360-01-269-7264	8X093	10274	. SPRING,TRANSPORTER.....	2
13	PAFZZ	5306-01-258-0830	1TUY2	1027300	. BOLT,MACHINE.....	2
14	PAFZZ	5305-01-485-0771	05047	S630NA84CAG1235 4BNBA3	. SCREW,MACHINE 5/16-18 X 5/8".....	4
15	PAFZZ	5310-00-809-8540	96906	MS27183-25	. WASHER,FLAT 7/8" ID.....	1
16	PAFZZ	5310-00-269-4040	81349	M45913/1-10CG5C	. NUT,SELF-LOCKING,HE 5/8-11UNC.....	2
17	PAFZZ	5310-00-809-3079	96906	MS27183-19	. WASHER,FLAT 5/8" ID, USE ON TOP BOLT ONLY.....	2
18	PAFZZ	3120-01-494-9225	19207	12479775	. ROLLER,LINEAR-ROTAR.....	1
19	PAFZZ	3120-01-494-9220	19207	12479776	. ROLLER,LINEAR-ROTAR.....	2
20	PAFZZ	3040-01-349-6927	1TUY2	12426	. DAMPER,INERTIA.....	1
21	PAFZZ	1740-01-269-7270	19207	12479779	. PIN,DAMPER TRANSPOR.....	1
22	PAFZZ	5315-00-012-0123	80059	AN380-4-5	. PIN,COTTER.....	2
23	PAFZZ	2540-01-495-8288	19204	12479774	. COUPLER,DRAWBAR,RIN.....	1
24	XAFZZ	5340-01-525-4842	19207	12479772	. COVER,ACCESS.....	1
25	PAFZZ	5305-01-484-2488	80204	B210NA00CAP3935 4BNBA1	. SCREW,CAP,HEXAGON H 5/8-11 X 5 1/2,GR 8.....	2
26	PAFZZ	5315-01-494-8535	19207	12479777	. PIN,STRAIGHT,HEADED.....	1
27	PAFZZ	4710-01-413-4031	19207	12449601	TUBE ASSEMBLY,METAL.....	1
28	PAFZZ	4720-01-416-5916	5H671	253-50128-13000	HOSE ASSEMBLY,NONME.....	3
29	PAFZZ	5340-01-414-1453	19207	12449366-2	CLAMP,LOOP 1/2 DIA.....	3

(1) ITEM NO.	(2) SMR CODE	(3) NSN	(4) CAGEC	(5) PART NUMBER	(6) DESCRIPTION AND USABLE ON CODE (UOC)	(7) QTY
30	PAFZZ	5320-01-414-1459	9K475	MBP-R8-M8	RIVET,BLIND	5
31	PAFZZ	5320-01-412-8088	17446	BOM-R8-9	RIVET,BLIND	2
32	PAFZZ	4710-01-413-4029	19207	12449602	TUBE ASSEMBLY,METAL	1
33	PAFZZ	5325-00-842-2613	96906	MS16633-1062	RING,RETAINING	3
34	PAFZZ	5305-01-414-5631	19207	12449499	SETSCREW	2
35	PAFZZ	5340-01-414-2178	18076	12449366-4	CLAMP,LOOP	2
36	PAFZZ	5340-01-415-1896	0Z899	1457	CLIP,SPRING TENSION	2
37	PAFZZ	5340-01-414-2172	18076	12449366-3	CLAMP,LOOP 3/4 DIA	5
38	PAFZZ	4710-01-412-6770	33875	12449603	TUBE ASSEMBLY,METAL	1
39	PAFZZ	5305-00-071-2084	80204	B1821BH050C550N	. SCREW,CAP,HEXAGON H 1/2-13 X 5 1/2	1
40	PAFZZ	5310-00-809-5998	96906	MS27183-18	WASHER,FLAT 17/32	2
41	PAFZZ	5310-00-225-6993	81349	M45913/1-8CG5C	NUT,SELF-LOCKING,HE 1/2-13	1
42	PAFZZ	5320-01-140-1479	9K475	BOM-R8-10	RIVET,BLIND	1
43	PAFZZ	4730-00-287-1706	81343	SAE J512 3-3-3 040401BA	TEE,TUBE	1

END OF FIGURE

FIELD MAINTENANCE
BRAKE DRUM

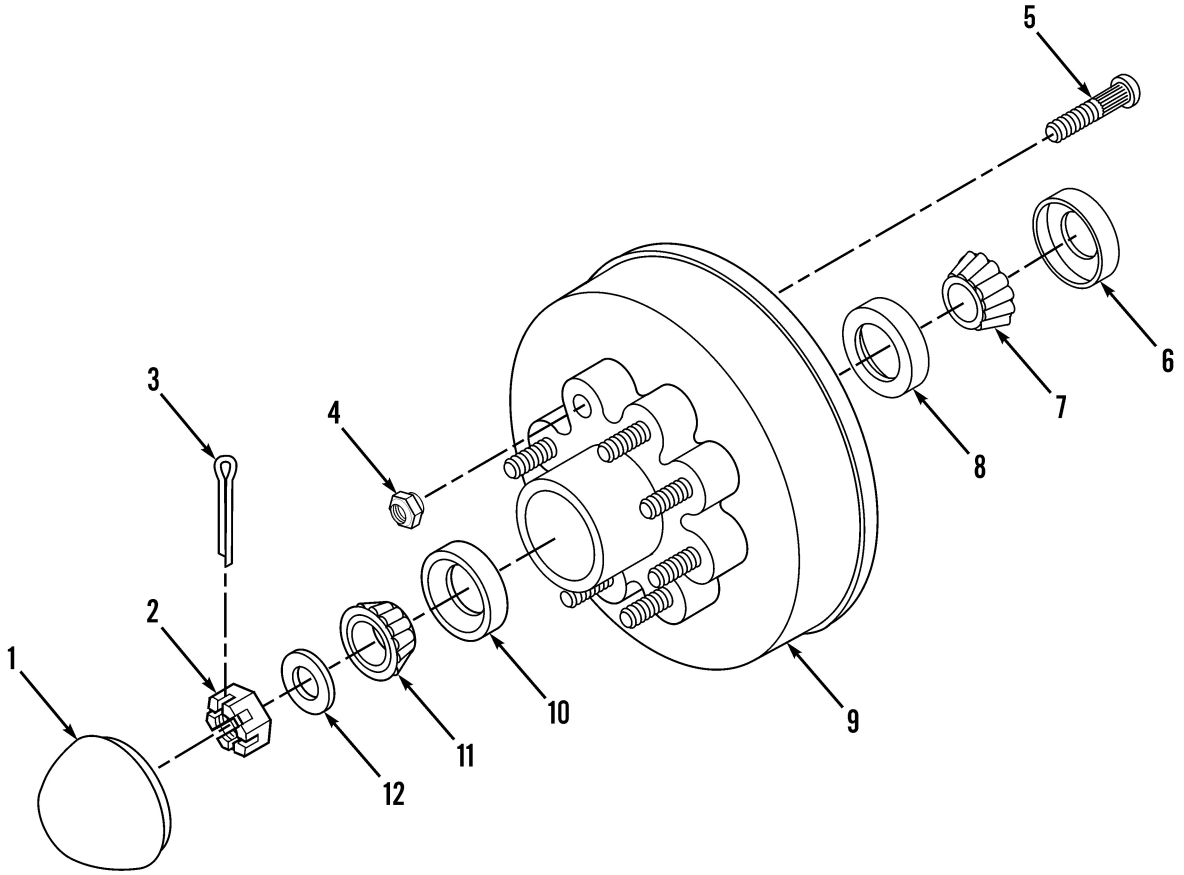

R5395009

Figure 9. Brake Drum.

(1) ITEM NO.	(2) SMR CODE	(3) NSN	(4) CAGEC	(5) PART NUMBER	(6) DESCRIPTION AND USABLE ON CODE (UOC)	(7) QTY
					GROUP 1311 WHEEL ASSEMBLY	
					FIG. 9 BRAKE DRUM.	
1	PAFZZ	2530-01-412-9564	02890	363419	CAP,GREASE	2
2	PAFZZ	5310-01-412-1777	19207	12449398-3	NUT,PLAIN,CASTELLAT 1.00-14 X 1.5 ACROSS FLATS	2
3	PAFZZ	5315-01-417-1051	0Z890	91901	PIN,COTTER	2
4	PAFZZ	5310-01-414-6476	0Z890	90640	NUT,PLAIN,CAP	16
5	PAFZZ	5306-01-418-9086	0Z890	9251100	BOLT,SHOULDER	16
6	PAFZZ	5330-01-412-4447	01212	12449388	SEAL,PLAIN ENCASED	2
7	PAFZZ	3110-00-100-5303	58536	AA59649-267	BEARING,ROLLER,TAPE	2
8	PAFZZ	3110-00-100-3541	0LTL1	25580	CONE AND ROLLERS,TA	2
9	PAFZZ	2530-01-412-7571	0Z890	9089324	BRAKE DRUM	2
10	PAFZZ	3110-00-142-4355	0PS51	0601100	CONE AND ROLLERS,TA	2
11	PAFZZ	3110-00-100-5997	96906	MS19081-186	BEARING,ROLLER,TAPE	2
12	PAFZZ	5310-01-417-2927	0Z890	363259	WASHER,FLAT	2

END OF FIGURE

FIELD MAINTENANCE
WHEEL AND RUNFLAT ASSEMBLY

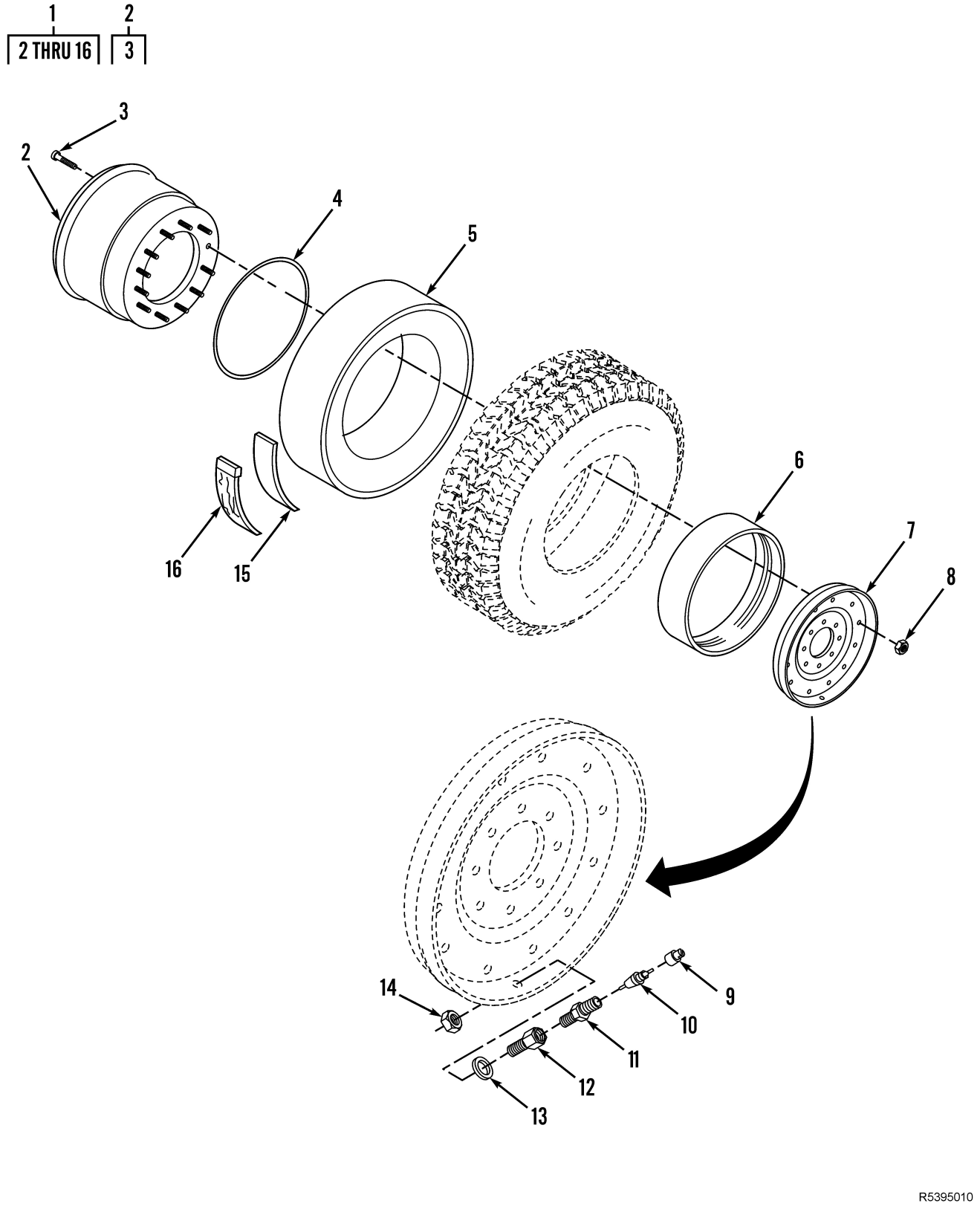

Figure 10. Wheel and Runflat Assembly.

(1) ITEM NO.	(2) SMR CODE	(3) NSN	(4) CAGEC	(5) PART NUMBER	(6) DESCRIPTION AND USABLE ON CODE (UOC)	(7) QTY
					GROUP 1311 WHEEL ASSEMBLY	
					FIG. 10 WHEEL AND RUNFLAT ASSEMBLY.	
1	PCFFF	2530-01-493-5859	19207	12460176	WHEEL AND RUNFLAT (3850 LBS).....	2
2	XDFFF		19207	12342642	. RIM,WHEEL,PNEUMATIC.....	1
3	PAFZZ	5306-01-336-7175	19207	12342758	. . BOLT,RIBBED NECK.....	12
4	PCFZZ	5331-01-335-8878	19207	12342633	. O-RING.....	1
5	PCFZZ	2640-01-334-9453	19207	12342638	. RUNFLAT,INSERT.....	1
6	PAFZZ	2530-01-338-2730	62161	D5311-2	. BEADLOCK,TIRE RIM.....	1
7	XDFZZ	2530-01-336-3127	19207	12342640	. RIM,WHEEL,PNEUMATIC.....	1
8	PAFZZ	5310-01-198-7585	19207	12339501	. NUT,SELF-LOCKING,HE.....	12
9	PAFZZ	2640-01-098-2029	39BV2	627-100-GOVT	. CAP,PNEUMATIC VALVE.....	1
10	PAFZZ	2640-00-050-1229	39BV2	100-AA	. VALVE CORE.....	1
11	PAFZZ	2640-01-335-4583	63900	12342634	. VALVE,PNEUMATIC TIR.....	1
12	PAFZZ	4730-01-346-1063	41885	90619D	. ADAPTER,STRAIGHT,PI.....	1
13	PCFZZ	5331-01-346-3806	19207	12342794	. O-RING.....	1
14	PAFZZ	5310-00-449-2376	80205	MS21245-8	. NUT,SELF-LOCKING,HE.....	1
15	MFFZZ		34623	5588618-13	. TAPE,ADHESIVE,ACRYL MAKE FROM TAPE,ADHESIVE,RUBBER P/N MIS-41157-08, CAGE 18876.....	1
16	PCFZZ	2640-01-419-6200	19207	12460308	. LUBRICANT,RUNFLAT.....	1

END OF FIGURE

FIELD MAINTENANCE
TIRES

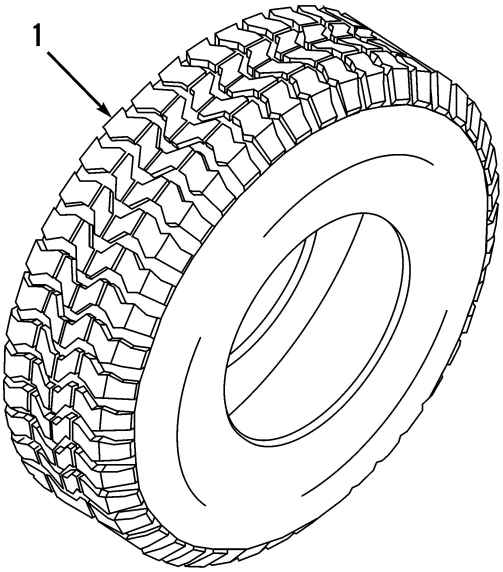

R5395011

Figure 11. Tires.

(1) ITEM NO.	(2) SMR CODE	(3) NSN	(4) CAGEC	(5) PART NUMBER	(6) DESCRIPTION AND USABLE ON CODE (UOC)	(7) QTY
					GROUP 1313 TIRES, TUBES, TIRE CHAINS	
					FIG. 11 TIRES.	
1	PCFZZ	2610-01-333-7632	04NP3	743-123-154	TIRE,PNEUMATIC,VEHI.....	2
					END OF FIGURE	

FIELD MAINTENANCE
SAFETY CHAINS

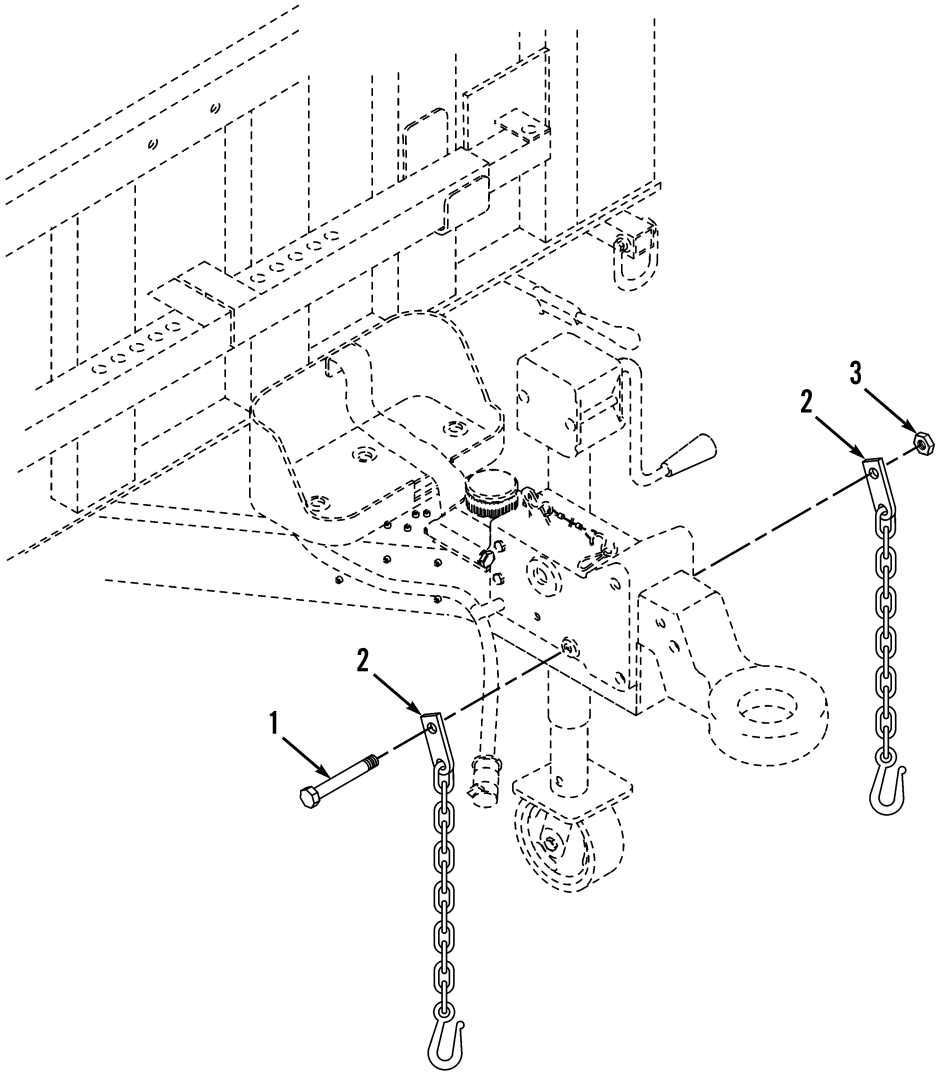

R5395012

Figure 12. Safety Chains.

(1) ITEM NO.	(2) SMR CODE	(3) NSN	(4) CAGEC	(5) PART NUMBER	(6) DESCRIPTION AND USABLE ON CODE (UOC)	(7) QTY
					GROUP 1503 PINTLES AND TOWING ATTACHMENTS	
					FIG. 12 SAFETY CHAINS.	
1	PAFZZ	5305-01-484-2504	80204	B210NA00CAM3635 4BNBA1	SCREW,CAP,HEXAGON H 1/2-13 X 4 3/4..	1
2	PAFZZ	4010-01-412-1282	33875	12449501	CHAIN ASSEMBLY,SING.....	2
3	PAFZZ	5310-00-225-6993	81349	M45913/1-8CG5C	NUT,SELF-LOCKING,HE.....	1
					END OF FIGURE	

FIELD MAINTENANCE
LANDING GEAR AND LEVELING JACKS

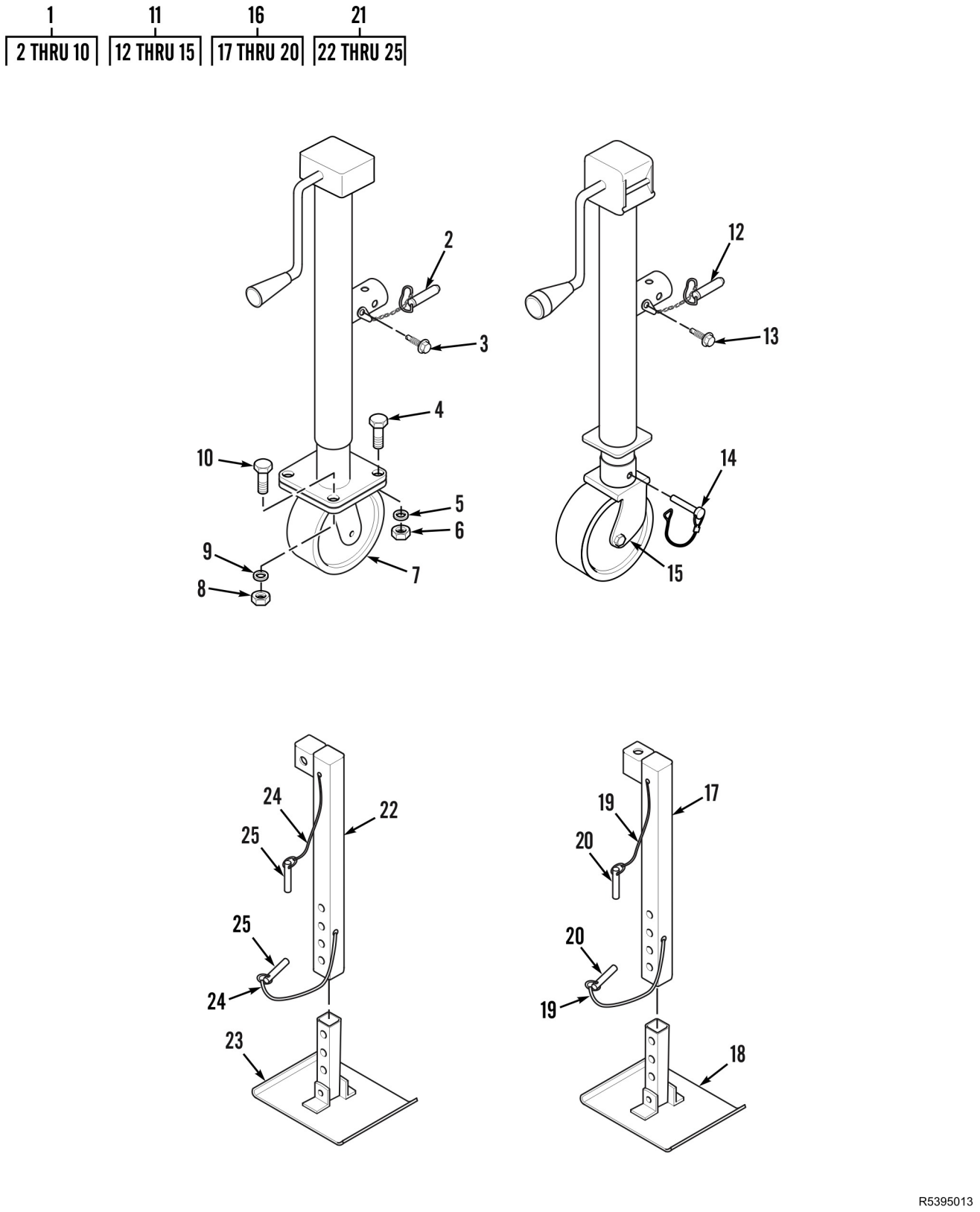

Figure 13. Landing Gear and Leveling Jacks.

(1) ITEM NO.	(2) SMR CODE	(3) NSN	(4) CAGEC	(5) PART NUMBER	(6) DESCRIPTION AND USABLE ON CODE (UOC)	(7) QTY
					GROUP 1507 LANDING GEAR, LEVELING JACKS (MECHANICAL OR HYDRAULIC)	
					FIG. 13 LANDING GEAR AND LEVELING JACKS.	
1	PAFFF	2590-01-484-0440	01084	14158	SUPPORT,RETRACTABLE (5000 LB).....	1
2	PAFZZ	5315-01-412-0585	60153	280302-18	. PIN,SPRING.....	1
3	PAFZZ	5305-01-269-1484	39428	90054A291	. SCREW,TAPPING #12 X 1/2.....	1
4	PAFZZ	5305-00-716-8207	80205	MS90725-136	. SCREW,CAP,HEXAGON,H 9/16-12 X 1 1/4.....	2
5	PAFZZ	5310-00-809-3079	96906	MS27183-19	. WASHER,FLAT 9/16 ID X 1 3/8 OD X 1/8 THK.....	2
6	PAFZZ	5310-00-176-6271	81349	M45913/1-9CG5C	. NUT,SELF-LOCKING,HE 9/16-12.....	2
7	PAFZZ	5340-01-421-9828	01084	10560	. CASTER,SWIVEL.....	1
8	PAFZZ	5310-00-087-4652	81349	M45913/1-6CG5C	. NUT,SELF-LOCKING,HE 3/8-16.....	2
9	PAFZZ	5310-00-080-6004	96906	MS27183-14	. WASHER,FLAT 3/8 ID X 13/16 OD X 1/16 THK.....	2
10	PAFZZ	5305-00-068-0511	80204	MS90725-62	. SCREW,CAP,HEXAGON,H 3/8-16 X 1 1/4	2
11	PAFFF	2590-01-484-0440	01084	14158	SUPPORT,RETRACTABLE.....	1
12	PAFZZ	5315-01-412-0585	60153	280302-18	. PIN,SPRING.....	1
13	PAFZZ	5305-01-269-1484	39428	90054A291	. SCREW,TAPPING #12 X 1/2.....	1
14	PAFZZ	5315-01-533-3306	39428	98416A409	. PIN,LOCK.....	1
15	PAFZZ		1CSL0	505877	. CASTER,SWIVEL.....	1
16	PAFFF	2590-01-416-3276	19207	12449506	LEG,INNER,SHOE,JACK UOC: HMT,LMT	2
17	PAFZZ	4710-01-414-0328	33875	12449566	. TUBE,METALLIC UOC: HMT,LMT	1
18	PAFZZ	2590-01-412-8175	33875	12449567	. SHOE,JACK-SUPPORT UOC: HMT,LMT	1
19	PAFZZ	4010-01-413-0269	19207	12449510	. WIRE ROPE ASSEMBLY, UOC: HMT,LMT	2
20	PAFZZ	5315-01-525-4843	39428	98320A625	. PIN,QUICK RELEASE 5/8 X 2 1/2 USABLE LENGTH X 3 1/4 OVERALL LENGTH UOC: HMT,LMT	2
21	PAFFF	2590-01-486-3208	19207	12449591	LEG,INNER,SHOE,JACK UOC: CMT	2
22	XAFZZ	4710-01-486-3210	19207	12449592	. TUBE,METALLIC UOC: CMT	1
23	XAFZZ	2590-01-486-3209	19207	12449596	. SHOE,JACK-SUPPORT UOC: CMT	1

(1) ITEM NO.	(2) SMR CODE	(3) NSN	(4) CAGEC	(5) PART NUMBER	(6) DESCRIPTION AND USABLE ON CODE (UOC)	(7) QTY
24	PAFZZ	4010-01-413-0269	19207	12449510	. WIRE ROPE ASSEMBLY, UOC: CMT	2
25	PAFZZ	5315-00-121-7929	09332	C10-29R	. PIN,QUICK RELEASE 5/8 X 3 GRIP LENGTH X 3 3/4 OVERALL LENGTH UOC: CMT	2

END OF FIGURE

FIELD MAINTENANCE
SHOCK ABSORBERS

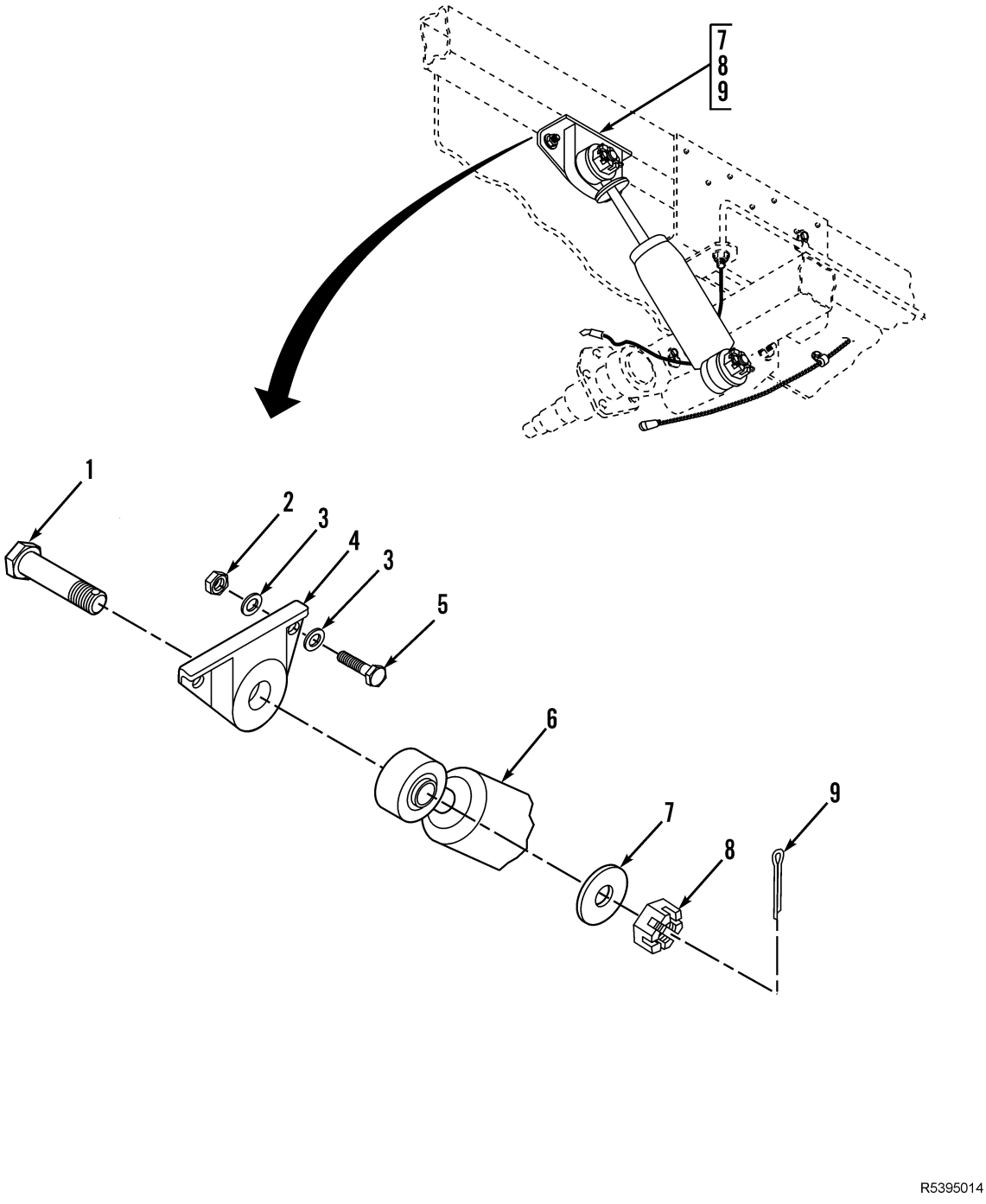

Figure 14. Shock Absorbers.

(1) ITEM NO.	(2) SMR CODE	(3) NSN	(4) CAGEC	(5) PART NUMBER	(6) DESCRIPTION AND USABLE ON CODE (UOC)	(7) QTY
					GROUP 1604 SHOCK ABSORBER EQUIPMENT	
					FIG. 14 SHOCK ABSORBERS.	
1	PAFZZ	5305-01-415-4725	19207	12449378-1	SCREW,CAP,HEXAGON H.....	2
2	PAFZZ	5310-01-412-1773	19207	12449377-3	NUT,SELF-LOCKING,HE 1/2-13.....	4
3	PAFZZ	5310-00-809-5998	96906	MS27183-18	WASHER,FLAT.....	8
4	PAFZZ	2590-01-417-5816	33875	12449996	BRACKET,VEHICULAR C.....	2
5	PAFZZ	5305-00-071-2067	80204	B1821BH050C125N	SCREW,CAP,HEXAGON H.....	4
6	PAFZZ	2510-01-190-3862	19207	12480613	SHOCK ABSORBER,DIRE.....	2
7	PAFZZ	5310-01-412-0863	19207	12449379-8	WASHER,FLAT.....	4
8	PAFZZ	5310-01-414-3664	19207	12449398-2	NUT,PLAIN,CASTELLAT.....	4
9	PAFZZ	5315-01-416-5358	19207	12449364-3	PIN,COTTER.....	4

END OF FIGURE

FIELD MAINTENANCE
TAILGATE, TIEDOWNS, AND FRONT SUPPORT

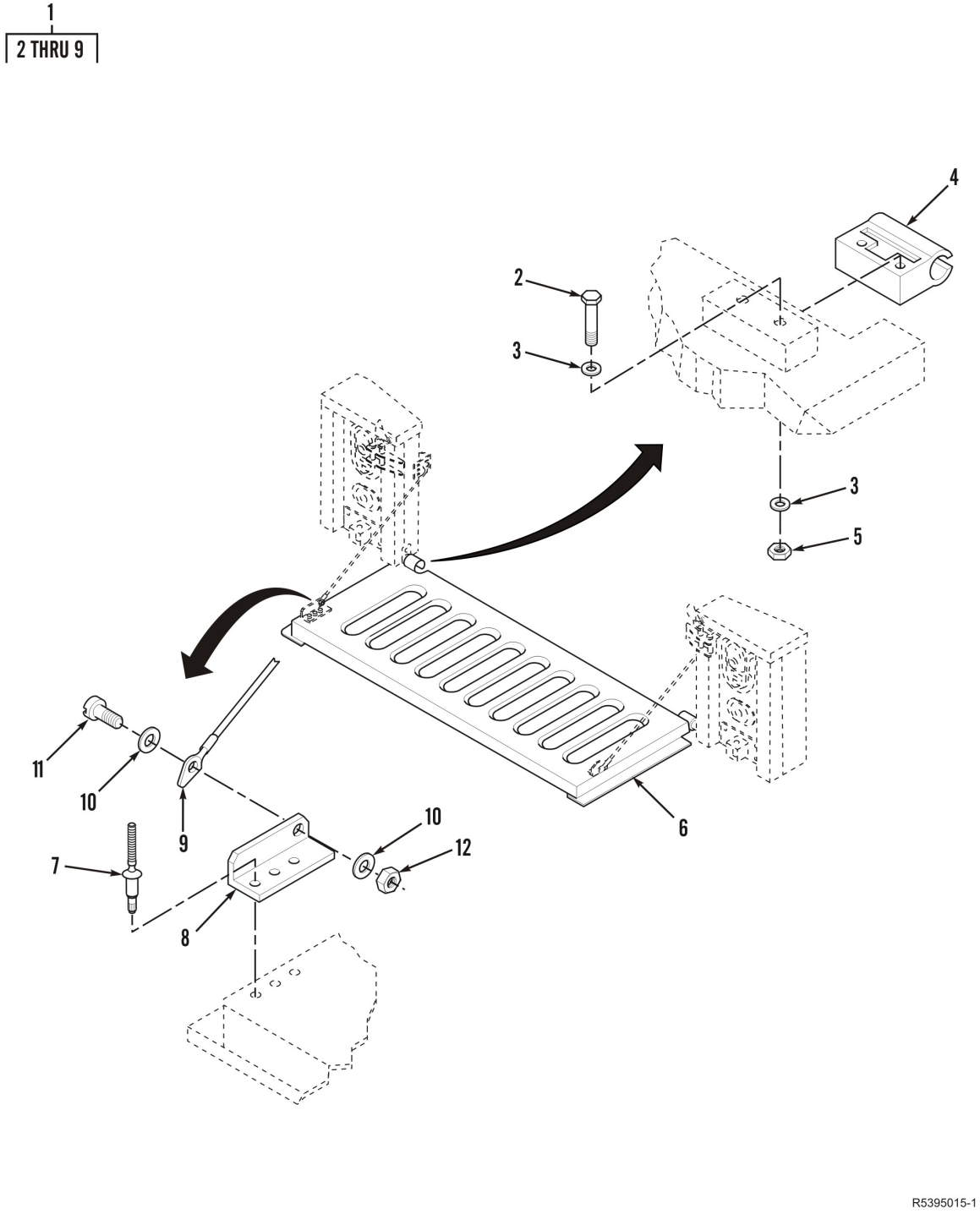

Figure 15. Tailgate, Tiedowns, and Front Support (Sheet 1 of 4).

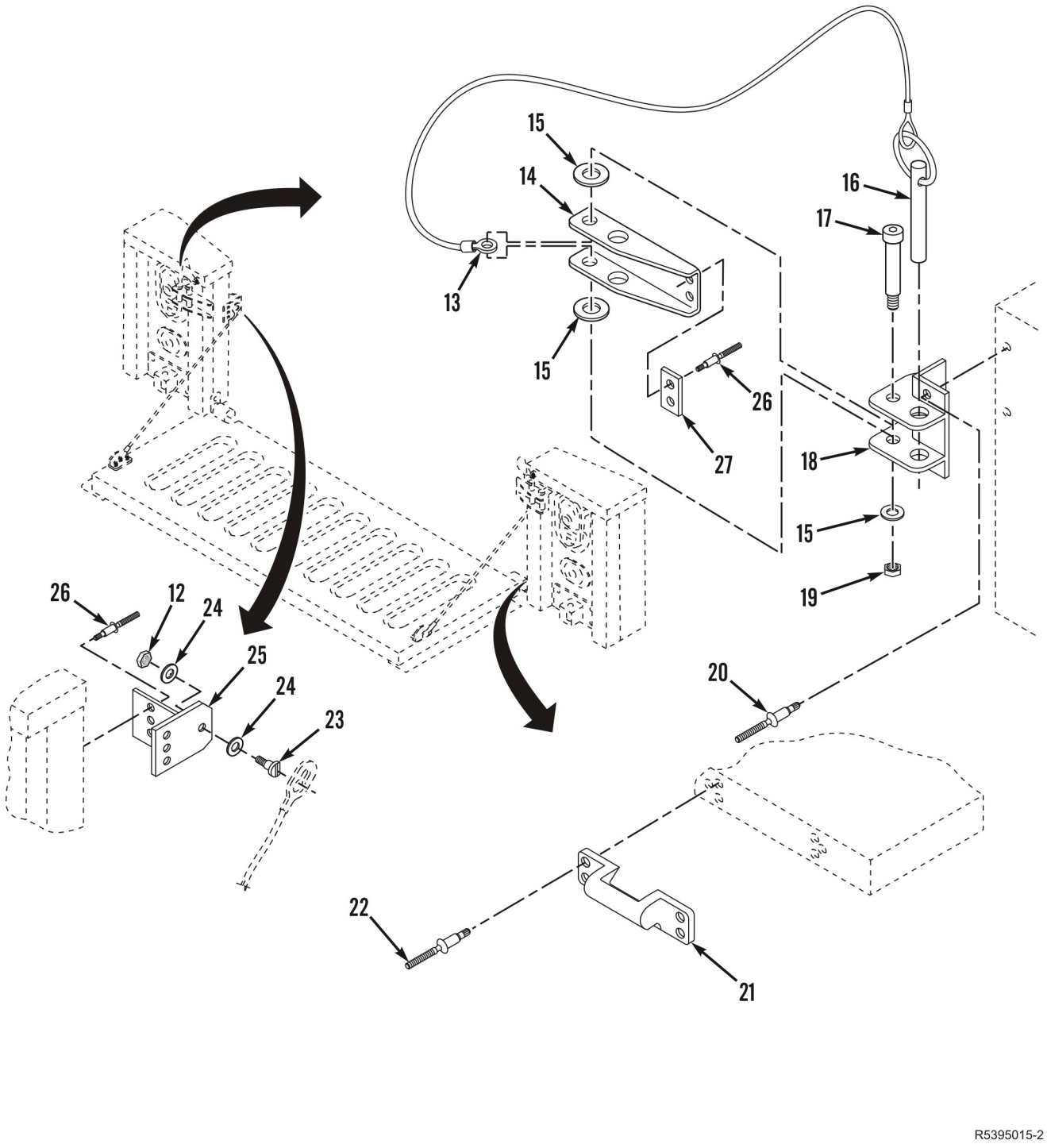

Figure 15. Tailgate, Tiedowns, and Front Support (Sheet 2 of 4).

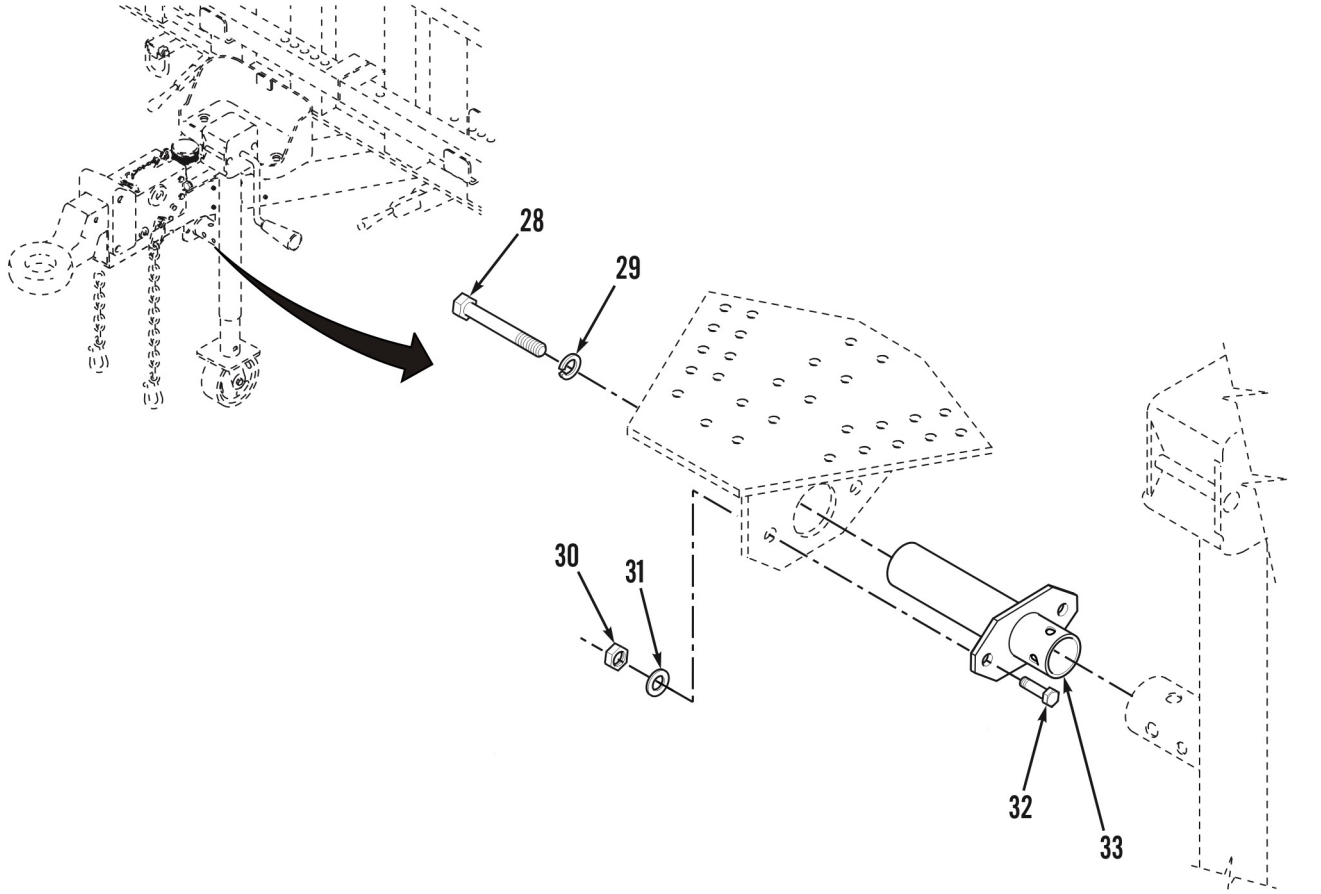

R5395015-3

Figure 15. Tailgate, Tiedowns, and Front Support (Sheet 3 of 4).

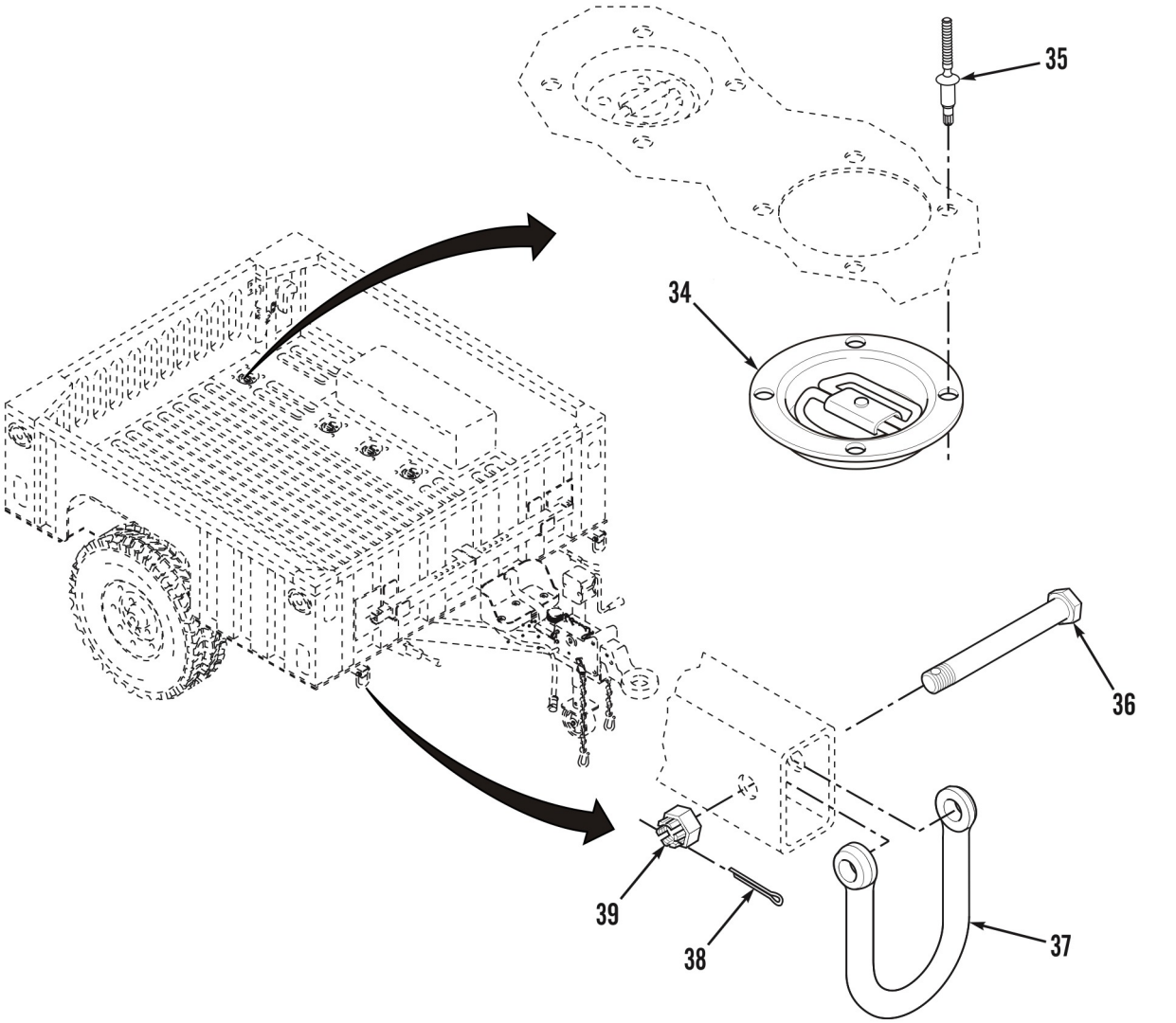

Figure 15. Tailgate, Tiedowns, and Front Support (Sheet 4 of 4).

(1) ITEM NO.	(2) SMR CODE	(3) NSN	(4) CAGEC	(5) PART NUMBER	(6) DESCRIPTION AND USABLE ON CODE (UOC)	(7) QTY
					GROUP 1810 CARGO BODY	
					FIG. 15 TAILGATE, TIEDOWNS, AND FRONT SUPPORT.	
1	PAFFF	2510-01-414-2264	33875	12449549	TAILGATE,VEHICLE BO UOC: HMT,LMT	1
2	PAFZZ	5306-00-226-4833	80204	B1821BH031C200N	. BOLT,MACHINE 5/16-18 X 2.00 UOC: HMT,LMT	4
3	PAFZZ	5310-00-081-4219	96906	MS27183-12	. WASHER,FLAT UOC: HMT,LMT	8
4	PAFZZ	2510-01-416-1427	33875	12449579	. HINGE,DOOR,VEHICULA UOC: HMT,LMT	2
5	PAFZZ	5310-01-500-9667	19207	12449377-4	. NUT,SELF-LOCKING,HE 5/16-18 UOC: HMT,LMT	4
6	PAFZZ	2510-01-416-3272	33875	12449550	. TAILGATE,VEHICLE BO UOC: HMT,LMT	1
7	PAFZZ	5320-01-501-0040	17446	12449374-1	. RIVET,BLIND .250 DIA X .345-.406 GRIP UOC: HMT,LMT	6
8	PAFZZ	5340-01-415-0637	33875	12449553-1	. BRACKET,ANGLE RH UOC: HMT,LMT	1
8	PAFZZ	5340-01-415-1274	19207	12449553-2	. BRACKET,ANGLE LH UOC: HMT,LMT	1
9	PAFZZ	4010-01-416-8873	01084	12449554-2	. WIRE ROPE ASSEMBLY, LH UOC: HMT,LMT	1
9	PAFZZ	2590-01-416-4526	19207	12449554-1	. TAIL GATE CABLE RH UOC: HMT,LMT	1
10	PAFZZ	5310-00-274-8041	06853	204235	WASHER,FLAT	4
11	PAFZZ	5305-01-415-1924	19207	12449528	SCREW,SHOULDER 3/8-16 X 1.250 CABLE-LOWER UOC: HMT,LMT	2
12	PAFZZ	5310-00-087-4652	81349	M45913/1-6CG5C	NUT,SELF-LOCKING,HE 3/8-16 UOC: HMT,LMT	6
13	PAFZZ	4010-01-413-0269	19207	12449510	WIRE ROPE ASSEMBLY, UOC: HMT,LMT	2
14	PAFZZ	2910-01-412-8976	01084	7493	LATCH,TAILGATE UOC: HMT,LMT	2
15	PAFZZ	5310-00-614-3505	80205	MS15795-820	WASHER,FLAT UOC: HMT,LMT	6
16	PAFZZ	5315-01-525-4843	39428	98320A625	PIN,QUICK RELEASE .625 DIA UOC: HMT,LMT	2
17	PAFZZ	5305-01-416-1793	19207	12449564	SCREW,SHOULDER 1/2-13 X 3.250 UOC: HMT,LMT	2
18	PAFZZ	5340-01-412-1891	33875	12449534	STRIKE,CATCH UOC: HMT,LMT	2
19	PAFZZ	5310-01-412-1773	19207	12449377-3	NUT,SELF-LOCKING,HE 1/2-13	2

(1) ITEM NO.	(2) SMR CODE	(3) NSN	(4) CAGEC	(5) PART NUMBER	(6) DESCRIPTION AND USABLE ON CODE (UOC)	(7) QTY
20	PAFZZ	5320-01-453-9377	9K475	MBP-R8-M7	RIVET,BLIND	4
21	PAFZZ	2510-01-416-1426	33875	12449578	HINGE,DOOR,VEHICULA UOC: HMT,LMT	2
22	PAFZZ	5320-01-140-1479	9K475	BOM-R8-10	RIVET,BLIND .250 DIA X .595-.656 GRIP	8
23	PAFZZ	5306-01-610-0194	19207	12449527	SCREW,SHOULDER 3/8-16 X 1.250 CABLE-UPPER UOC: HMT,LMT	2
24	PAFZZ	5310-01-416-6520	19207	12449379-6	WASHER,FLAT 11/16 ID X 1 5/16 OD X 5/32 THK	4
25	PAFZZ	5340-01-412-1288	19207	12449555	BRACKET,MOUNTING UOC: HMT,LMT	2
26	PAFZZ	5320-01-491-6622	9K475	MBP-R8-M5	RIVET,BLIND UOC: HMT,LMT	6
27	PCFZZ	2590-01-415-3162	19207	12449521	PAD,CUSHIONING UOC: HMT,LMT	2
28	PAFZZ	5305-00-916-2345	80204	B1821BH075F200N	SCREW,CAP,HEXAGON H 3/4-16 X 2.00	1
29	PAFZZ	5310-01-412-1779	19207	12449387-2	WASHER,LOCK 3/4	1
30	PAFZZ	5310-01-130-4274	24617	9422305	NUT,SELF-LOCKING,HE 5/8-11	2
31	PAFZZ	5310-01-416-6520	19207	12449379-6	WASHER,FLAT 11/16 ID X 1 5/16 OD X 5/32 THK	2
32	PAFZZ	5305-00-724-7220	80204	B1821BH063C150N	SCREW,CAP,HEXAGON H 5/8-11 X 1.500	2
33	PAFZZ	4910-01-413-8722	33875	12449580	PIVOT JACK	1
34	PAFZZ	5340-01-412-1286	27182	F10-44XXZNXX	COVER,ACCESS (TIE-DOWN RING)	12
35	PAFZZ	5320-01-414-1459	9K475	MBP-R8-M8	RIVET,BLIND .250 DIA X .110-.189 GRIP	48
36	PAFZZ	5305-01-484-5540	19207	12449378-2	SCREW,CAP,HEXAGON H 5/8-18 X 5.500	4
37	PAFZZ	4030-01-316-1551	19207	12342354	SHACKLE	4
38	PAFZZ	5315-01-412-1771	19207	12449364-1	PIN,COTTER	4
39	PAFZZ	5310-01-412-1777	19207	12449398-3	NUT,PLAIN,CASTELLAT 5/8-18	4

END OF FIGURE

FIELD MAINTENANCE
ACCESSORY ITEMS

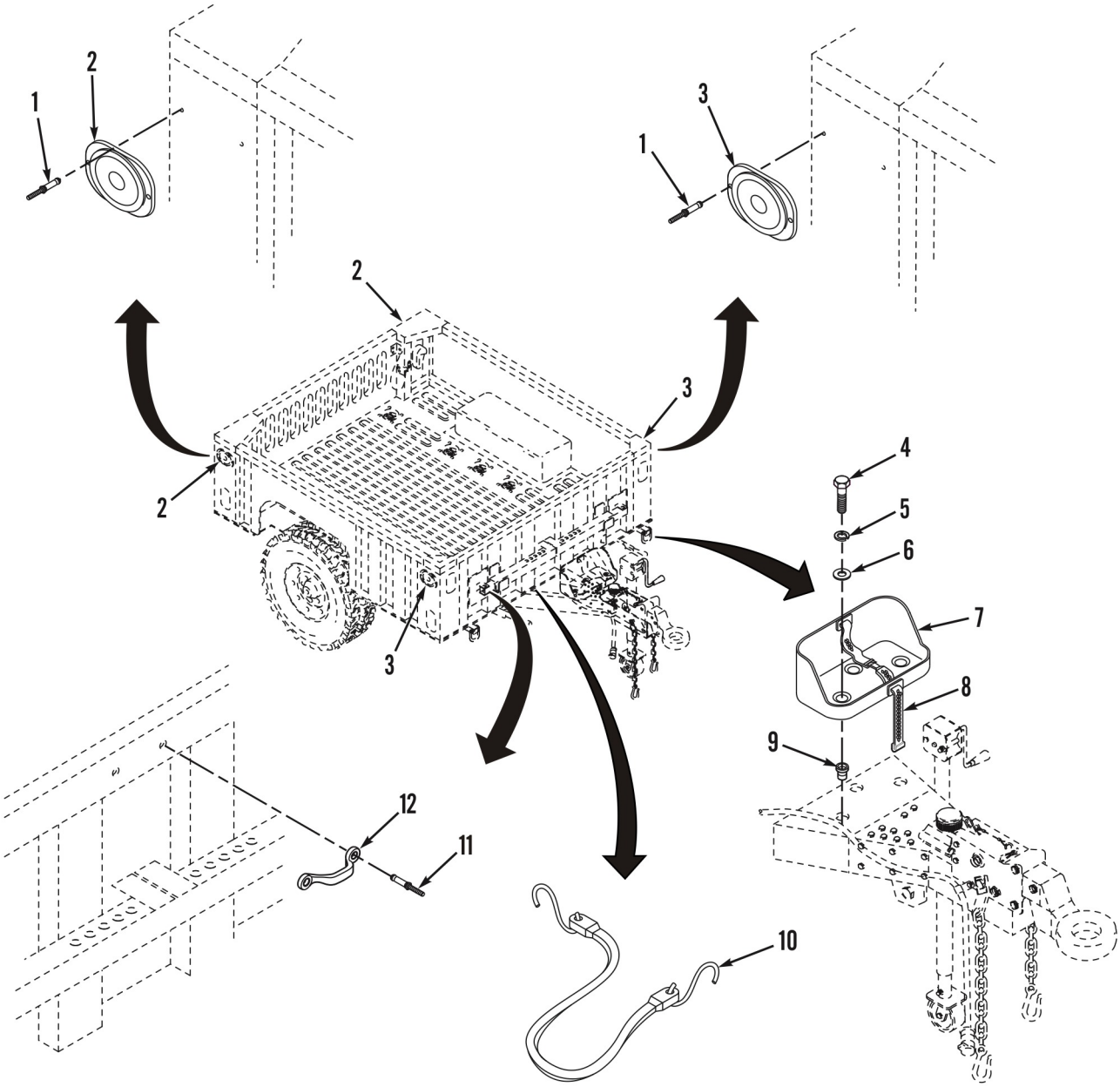

R5395016-1

Figure 16. Accessory Items (Sheet 1 of 3).

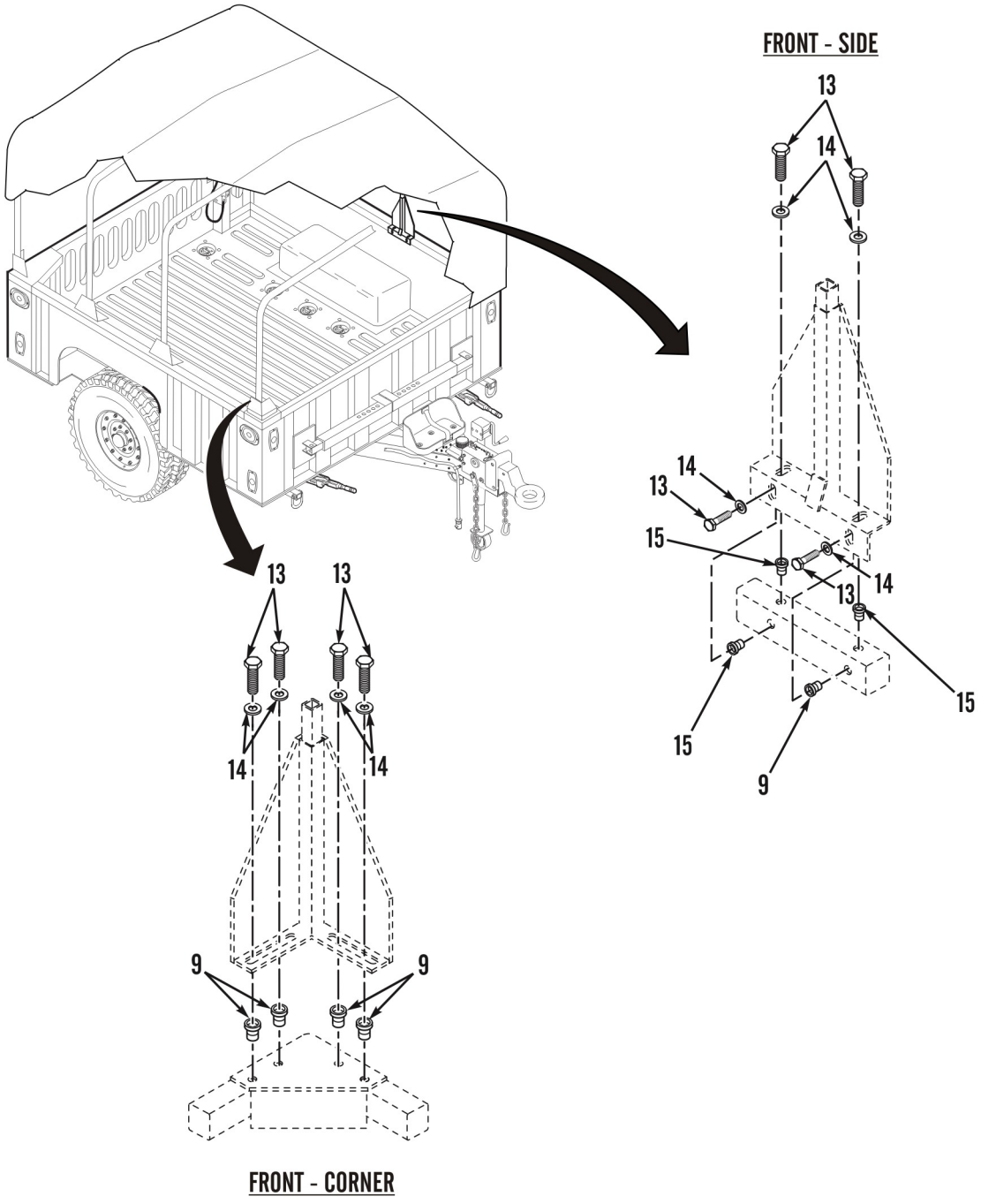

Figure 16. Accessory Items (Sheet 2 of 3).

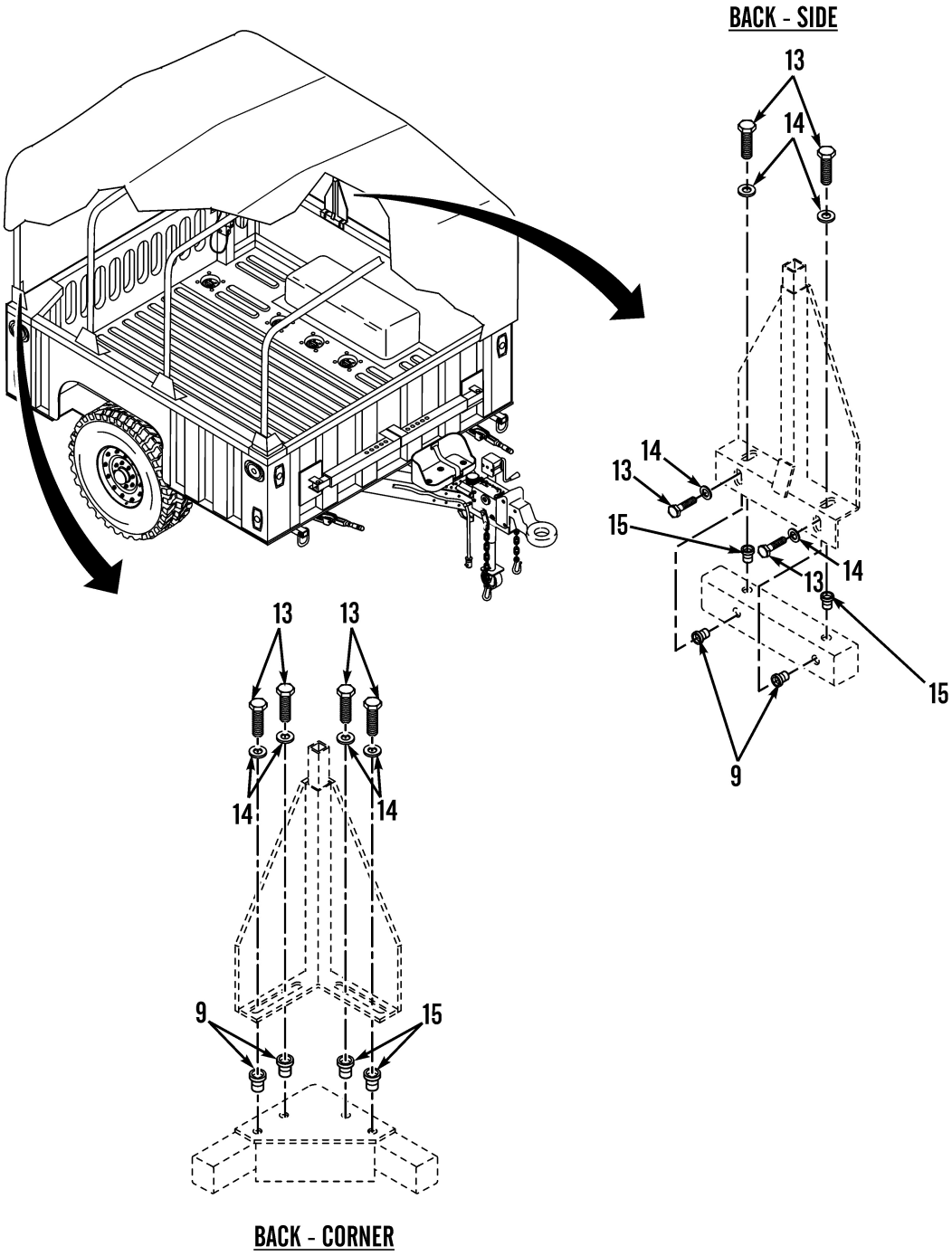

Figure 16. Accessory Items (Sheet 3 of 3).

(1) ITEM NO.	(2) SMR CODE	(3) NSN	(4) CAGEC	(5) PART NUMBER	(6) DESCRIPTION AND USABLE ON CODE (UOC)	(7) QTY
					GROUP 2202 ACCESSORY ITEMS	
					FIG. 16 ACCESSORY ITEMS.	
1	PAFZZ	5320-01-414-2171	11815	BAPK-69	RIVET,BLIND .198 DIA X .562-.575 GRIP.	12
2	PAFZZ	9905-00-205-2795	27315	56Z218	REFLECTOR,INDICATIN RED	4
3	PAFZZ	9905-00-202-3639	81834	0100A	REFLECTOR,INDICATIN AMBER	2
4	PAFZZ	5305-00-543-2866	80204	B1821BH038C250N	SCREW,CAP,HEXAGON H 3/8-16 X 2.50 IN	3
5	PAFZZ	5310-00-637-9541	81718	H2525M	WASHER,LOCK 3/8 IN	3
6	PAFZZ	5310-00-080-6004	96906	MS27183-14	WASHER,FLAT 3/8 IN	3
7	PAFZZ	5340-01-575-0079	19207	12449569	BRACKET,MOUNTING	1
8	PAFZZ	5340-00-968-4060	45152	3265037	STRAP,WEBBING	1
9	PAFZZ	5325-01-459-5008	78276	ALS4-616-312	INSERT,SCREW THREAD 3/8-16 X 0.805	19
10	PAFZZ	5340-01-485-5037	59678	11B356038-3	BRACKET TIEDOWN CAR LANDING LEG TIEDOWN	2
11	PAFZZ	5320-01-414-2171	11815	BAPK-69	RIVET,POP	42
12	PAFZZ	5340-01-197-8673	19207	12338839-4	HANDLE,BOW	21
13	PAFZZ	5305-00-543-4372	80204	B1821BH038C075N	SCREW,CAP,HEXAGON H	32
14	PAFZZ	5310-00-274-8041	06853	204235	WASHER,FLAT	32
15	PAFZZ	5325-01-483-7480	78276	ALS4-616-150	INSERT,SCREW THREAD 3/8-16 X 0.690	16

END OF FIGURE

FIELD MAINTENANCE
DATA PLATES

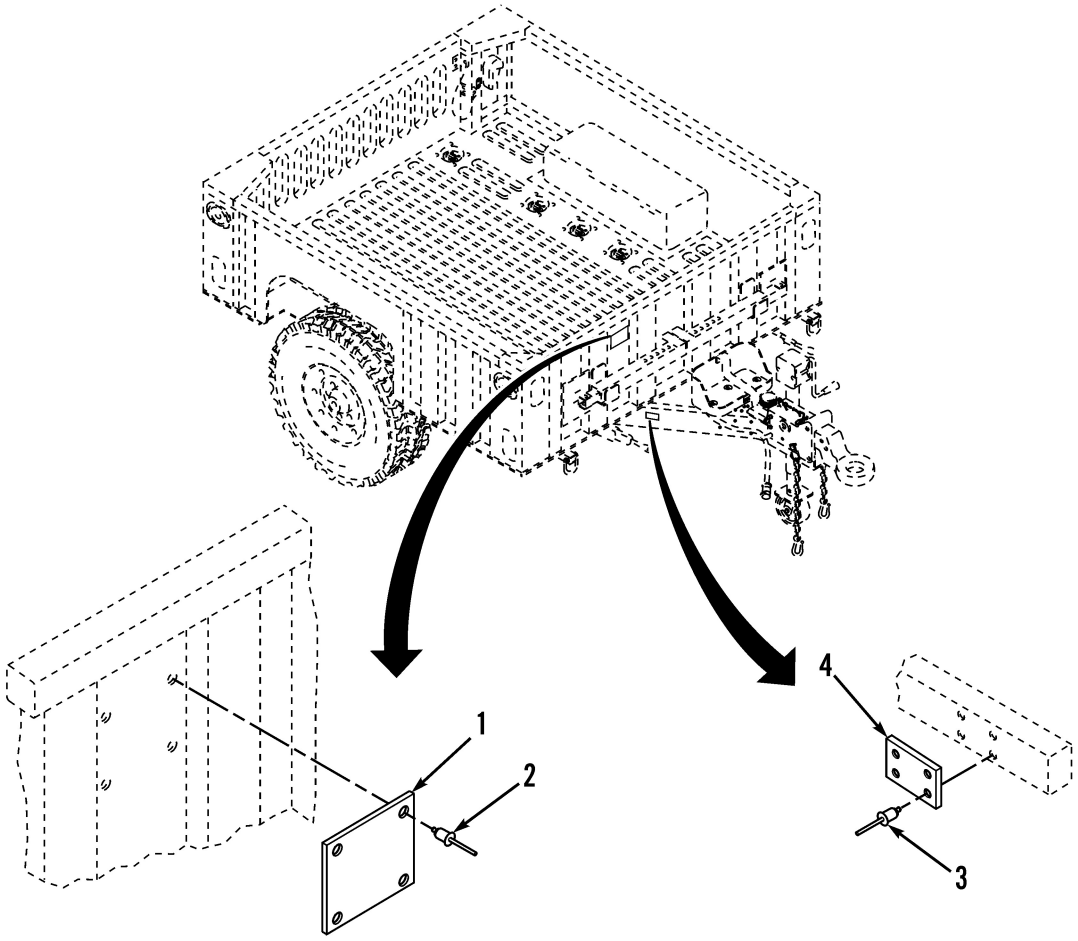

R5395017

Figure 17. Data Plates.

(1) ITEM NO.	(2) SMR CODE	(3) NSN	(4) CAGEC	(5) PART NUMBER	(6) DESCRIPTION AND USABLE ON CODE (UOC)	(7) QTY
					GROUP 2210 DATA PLATES AND INSTRUCTION HOLDERS	
					FIG. 17 DATA PLATES.	
1	PFFZZ	9905-01-486-9099	19207	12449621	PLATE,INSTRUCTION SHIPPING UOC: HMT,LMT	1
2	PAFZZ	5320-00-904-4136	81349	M24243/1B403	RIVET,BLIND .125 DIA X .126-.187 GRIP UOC: HMT,LMT	4
3	PAFZZ	5320-00-052-1972	81349	M24243/1B405	RIVET,BLIND .125 DIA X .251-.312 GRIP	4
4	PAFZZ	9905-01-487-5433	19207	12449613	PLATE,IDENTIFICATIO UOC: CMT	1
4	PAFZZ	9905-01-486-9095	19207	12449615	PLATE,IDENTIFICATIO UOC: LMT	1
4	PAFZZ	9905-01-486-8489	19207	12449611	PLATE,IDENTIFICATIO UOC: HMT	1

END OF FIGURE

FIELD MAINTENANCE
KITS

ILLUSTRATION NOT APPLICABLE

Figure KITS.

(1) ITEM NO.	(2) SMR CODE	(3) NSN	(4) CAGEC	(5) PART NUMBER	(6) DESCRIPTION AND USABLE ON CODE (UOC)	(7) QTY
					GROUP 9401 REPAIR KITS	
					FIG. KITS.	
1	PAFZZ	2530-01-530-5068	1CSL0	2026023	BRAKE SHOE SET.....	2
					END OF FIGURE	

FIELD MAINTENANCE
BULK

(1) ITEM NO.	(2) SMR CODE	(3) NSN	(4) CAGEC	(5) PART NUMBER	(6) DESCRIPTION AND USABLE ON CODE (UOC)	(7) QTY
					GROUP 9501 HARDWARE SUPPLIES AND BULK MATERIEL, COMMON	
					FIG. BULK.	
1	PCFZZ	9320-01-244-0046	18876	MIS-41157-08	TAPE,ADHESIVE,RUBBE 1.0 IN WIDE, 0.009 IN THICK, CLEAR, CONTAINS 60 YARDS/ROLL.....	1
					END OF FIGURE	

FIELD MAINTENANCE
NATIONAL STOCK NUMBER (NSN) INDEX

STOCK NUMBER	FIG.	ITEM
5315-00-012-0123	8	22
6240-00-019-0877	3	7
6240-00-019-3093	2	9
5310-00-043-1680	3	14
6240-00-044-6914	2	10
2640-00-050-1229	10	10
5320-00-052-1972	17	3
5305-00-068-0511	13	10
5305-00-071-2067	14	5
5305-00-071-2084	8	39
5310-00-080-6004	13	9
	16	6
5310-00-081-4219	6	6
	15	3
5305-00-082-8440	3	6
5310-00-087-4652	13	8
	15	12
3110-00-100-3541	9	8
3110-00-100-5303	9	7
3110-00-100-5997	9	11
5315-00-121-7929	13	25
3110-00-142-4355	9	10
2530-00-161-7575	7	23
2530-00-161-7576	7	23
5310-00-176-6271	13	6
9905-00-202-3639	16	3
9905-00-205-2795	16	2
5310-00-225-6993	8	41
	12	3
5306-00-226-4832	6	5
5306-00-226-4833	15	2
5305-00-269-3240	7	11
5310-00-269-4040	8	16
5310-00-274-8041	2	2
	15	10
	16	14
5325-00-276-6056	4	8
4730-00-287-1706	8	43
6220-00-299-7426	3	8
5310-00-449-2376	10	14
5331-00-462-0907	2	7
5305-00-543-2866	16	4
5305-00-543-4372	2	1
	16	13
6220-00-577-3434	3	11
5315-00-584-9053	6	7
5340-00-611-7883	1	1
5310-00-614-3505	15	15

STOCK NUMBER	FIG.	ITEM
5310-00-637-9541	16	5
5305-00-701-5071	3	10
5340-00-714-3113	7	10
5305-00-716-8207	13	4
5305-00-724-7220	5	2
	15	32
6220-00-726-1916	3	3
6250-00-729-9295	3	4
6220-00-752-6516	3	9
5310-00-809-3079	8	17
	13	5
5310-00-809-5998	8	40
	14	3
5310-00-809-8540	8	15
5325-00-842-2613	8	33
5320-00-904-4136	17	2
5305-00-916-2345	15	28
5310-00-934-9760	3	15
5340-00-968-4060	16	8
5305-00-984-6212	3	12
5305-00-989-7435	3	13
2640-01-098-2029	10	9
5310-01-100-5112	8	10
5306-01-100-5113	7	25
2530-01-121-0786	8	6
5310-01-130-4274	15	30
5320-01-140-1479	4	7
	8	42
	15	22
6150-01-167-6522	4	1
2510-01-190-3862	14	6
5342-01-194-3128	2	4
5340-01-197-8673	16	12
5310-01-198-7585	10	8
6220-01-200-0897	3	1
5306-01-258-0830	8	13
2530-01-263-7061	7	18
5305-01-269-1484	1	3
	13	3
	13	13
5360-01-269-7264	8	12
5330-01-269-7265	7	4
	8	11
5360-01-269-7266	8	3
1740-01-269-7270	8	21
5340-01-277-0300	7	21
6220-01-284-2709	2	11
2530-01-287-6869	7	6

STOCK NUMBER	FIG.	ITEM
5360-01-287-7297	7	19
5315-01-287-8770	7	7
2530-01-287-9409	7	31
2530-01-288-3979	7	32
5360-01-288-5870	7	2
6220-01-297-3217	2	12
5310-01-303-4701	3	5
4030-01-316-1551	15	37
2530-01-320-1686	7	5
2530-01-320-1687	7	5
5310-01-320-1980	7	13
5360-01-320-5815	7	17
5360-01-320-5818	7	20
5360-01-320-5819	7	28
5360-01-320-5820	7	29
5305-01-321-3522	7	8
2610-01-333-7632	11	1
2640-01-334-9453	10	5
2640-01-335-4583	10	11
5331-01-335-8878	10	4
2530-01-336-3127	10	7
5306-01-336-7175	10	3
2530-01-338-2730	10	6
4730-01-346-1063	10	12
5331-01-346-3806	10	13
3040-01-349-6927	8	20
6220-01-359-2870	2	8
6220-01-372-3883	2	6
5315-01-372-8923	6	8
5315-01-412-0585	13	2
	13	12
5310-01-412-0861	7	3
5310-01-412-0863	14	7
5340-01-412-1281	8	5
4010-01-412-1282	12	2
5340-01-412-1284	8	8
5340-01-412-1285	7	14
5340-01-412-1286	15	34
5340-01-412-1288	15	25
5315-01-412-1771	15	38
5310-01-412-1773	14	2
	15	19
5310-01-412-1774	6	9
5310-01-412-1777	9	2
	15	39
5310-01-412-1779	15	29
5340-01-412-1891	15	18
2530-01-412-3863	8	4
5330-01-412-4447	9	6
2530-01-412-5209	7	24
2530-01-412-5210	7	26
2530-01-412-5211	7	26
5325-01-412-5998	7	27

STOCK NUMBER	FIG.	ITEM
5305-01-412-6287	7	16
4730-01-412-6769	8	9
4710-01-412-6770	8	38
2530-01-412-7571	9	9
5320-01-412-8088	4	2
	8	31
2590-01-412-8175	13	18
2910-01-412-8976	15	14
2530-01-412-9564	9	1
4010-01-413-0269	13	19
	13	24
	15	13
6150-01-413-3481	4	5
4710-01-413-4029	8	32
4710-01-413-4031	8	27
4910-01-413-8722	15	33
4710-01-414-0328	13	17
5340-01-414-1453	4	6
	8	29
5320-01-414-1459	4	4
	6	4
	8	30
	15	35
5320-01-414-2171	2	5
	3	2
	16	1
	16	11
5340-01-414-2172	4	3
	8	37
5340-01-414-2178	8	35
2510-01-414-2264	15	1
5310-01-414-3664	14	8
5305-01-414-5631	8	34
5310-01-414-6476	9	4
2530-01-414-9307	6	1
2530-01-414-9314	7	1
2530-01-414-9317	7	1
5340-01-415-0637	15	8
5340-01-415-1274	15	8
5340-01-415-1896	8	36
5305-01-415-1924	15	11
2510-01-415-2636	6	2
2590-01-415-3162	15	27
5305-01-415-4725	14	1
2510-01-416-1426	15	21
2510-01-416-1427	15	4
5305-01-416-1793	15	17
2510-01-416-3272	15	6
2590-01-416-3276	13	16
2590-01-416-4526	15	9
5315-01-416-5358	14	9
4720-01-416-5916	8	28
5310-01-416-6520	5	3

STOCK NUMBER	FIG.	ITEM
	15	24
	15	31
4010-01-416-8873	15	9
5315-01-417-1051	9	3
5310-01-417-2927	9	12
2590-01-417-5816	14	4
6150-01-417-7502	2	3
6220-01-418-4404	3	11
5306-01-418-9086	9	5
2640-01-419-6200	10	16
2530-01-420-9983	5	1
5340-01-421-9828	13	7
5980-01-443-9093	3	3
5320-01-453-9377	1	2
	15	20
5325-01-459-5008	16	9
5310-01-466-0901	7	22
6220-01-482-6105	2	6
5325-01-483-7480	16	15
2590-01-484-0440	13	1
	13	11
5310-01-484-0489	7	9
5305-01-484-2488	8	25
5305-01-484-2504	12	1
5305-01-484-5540	15	36
5305-01-485-0771	8	14
6150-01-485-1459	4	5
5340-01-485-5037	16	10

STOCK NUMBER	FIG.	ITEM
5340-01-486-2862	6	3
2590-01-486-3208	13	21
2590-01-486-3209	13	23
4710-01-486-3210	13	22
9905-01-486-8489	17	4
9905-01-486-9095	17	4
9905-01-486-9099	17	1
9905-01-487-5433	17	4
5320-01-491-6622	15	26
2530-01-493-5859	10	1
2590-01-493-7898	8	1
5315-01-494-8535	8	26
3120-01-494-9220	8	19
3120-01-494-9225	8	18
2540-01-495-8288	8	23
5340-01-496-9412	8	2
5310-01-500-9667	15	5
5320-01-501-0040	15	7
5340-01-525-4842	8	24
5315-01-525-4843	13	20
	15	16
5310-01-530-1545	5	4
2530-01-530-5068	7	15
5315-01-533-3306	13	14
5340-01-549-5983	8	7
5340-01-575-0079	16	7
5315-01-598-2416	7	12
5306-01-610-0194	15	23

END OF WORK PACKAGE

FIELD MAINTENANCE
PART NUMBER (P/N) INDEX

PART NUMBER	FIG.	ITEM
AA52463-A08	3	7
AA52463-A09	2	9
AA59649-267	9	7
ALS4-616-150	16	15
ALS4-616-312	16	9
AN380-4-5	8	22
B1821BH031C175N	6	5
B1821BH031C200N	15	2
B1821BH038C075N	2	1
	16	13
B1821BH038C250N	16	4
B1821BH038F150N	7	11
B1821BH050C125N	14	5
B1821BH050C550N	8	39
B1821BH063C150N	5	2
	15	32
B1821BH075F200N	15	28
B210NA00CAM36354BNBA1	12	1
B210NA00CAP39354BNBA1	8	25
BAPK-69	2	5
	3	2
	16	1
	16	11
BOM-R8-10	4	7
	8	42
	15	22
BOM-R8-9	4	2
	8	31
C10-29R	13	25
D5311-2	10	6
F10-44XXZNXX	15	34
H2525M	16	5
M24243/1B403	17	2
M24243/1B405	17	3
M45913/1-10CG5C	8	16
M45913/1-6CG5C	13	8
	15	12
M45913/1-8CG5C	8	41
	12	3
M45913/1-9CG5C	13	6
MBP-R8-M5	15	26
MBP-R8-M7	1	2
	15	20
MBP-R8-M8	4	4
	6	4
	8	30
	15	35
MS15795-820	15	15

PART NUMBER	FIG.	ITEM
MS16633-1062	8	33
MS19081-186	9	11
MS21245-8	10	14
MS27183-12	6	6
	15	3
MS27183-14	13	9
	16	6
MS27183-18	8	40
	14	3
MS27183-19	8	17
	13	5
MS27183-25	8	15
MS3212-13	3	6
MS35206-265	3	12
MS35207-264	3	13
MS35421-2	3	8
MS35422-1	3	4
MS35423-1	3	11
MS35423-2	3	3
MS35489-106	4	8
MS35649-204	3	15
MS51412-1	3	5
MS51415-3	3	14
MS51959-61	3	10
MS90725-136	13	4
MS90725-62	13	10
S630NA84CAG12354BNBA3	8	14
SAE J512 3-3-3 040401BA	8	43
0100A	16	3
01191510	6	2
0601100	9	10
0777801184	7	27
0794900	7	25
094231	5	1
0953700	7	5
0978600	7	2
0978900	7	18
100-AA	10	10
10271	8	6
1027300	8	13
10274	8	12
10560	13	7
10891263-1	4	1
11639519-2	2	7
11B356038-3	16	10
12098	8	9
12338709	3	1
12338711	2	4

PART NUMBER	FIG.	ITEM
12338839-4	16	12
12339501	10	8
12342354	15	37
12342633	10	4
12342634	10	11
12342638	10	5
12342640	10	7
12342642	10	2
12342758	10	3
12342794	10	13
12360850-1	2	11
12360870-2	2	12
12375837	2	6
12375838	2	13
12375841	2	8
12422958	2	6
12426	8	20
12446845-1	3	11
12446845-2	3	3
12449364-1	15	38
12449364-3	14	9
12449366-2	4	6
	8	29
12449366-3	4	3
	8	37
12449366-4	8	35
12449366-6	6	3
12449374-1	15	7
12449377-3	14	2
	15	19
12449377-4	15	5
12449377-5	7	9
12449377-9	6	9
12449378-1	14	1
12449378-2	15	36
12449379-6	5	3
	15	24
	15	31
12449379-8	14	7
12449387-2	15	29
12449388	9	6
12449398-2	14	8
12449398-3	9	2
	15	39
12449499	8	34
12449501	12	2
12449506	13	16
12449510	13	19
	13	24
	15	13
12449521	15	27
12449527	15	23
12449528	15	11

PART NUMBER	FIG.	ITEM
12449534	15	18
12449549	15	1
12449550	15	6
12449553-1	15	8
12449553-2	15	8
12449554-1	15	9
12449554-2	15	9
12449555	15	25
12449564	15	17
12449566	13	17
12449567	13	18
12449569	16	7
12449578	15	21
12449579	15	4
12449580	15	33
12449591	13	21
12449592	13	22
12449596	13	23
12449601	8	27
12449602	8	32
12449603	8	38
12449611	17	4
12449613	17	4
12449615	17	4
12449621	17	1
12449996	14	4
12449997	4	5
12460176	10	1
12460308	10	16
12479772	8	24
12479774	8	23
12479775	8	18
12479776	8	19
12479777	8	26
12479779	8	21
12479780	8	2
12479800	8	1
12480613	14	6
12972	7	16
14158	13	1
	13	11
1455658	7	10
1457	8	36
15642901	6	1
1683	2	10
17406	7	13
1755600	8	7
17762	8	5
17803	8	3
17917	7	24
1806600317	8	8
18503	7	30
18508	7	7

PART NUMBER	FIG.	ITEM
18836	7	31
18950	7	3
2026020-1	7	1
2026020-2	7	1
2026023	7	15
204235	2	2
	15	10
	16	14
2109052	7	14
23323	7	32
23457	7	8
253-50128-13000	8	28
25580	9	8
280302-18	13	2
	13	12
3265037	16	8
363259	9	12
363419	9	1
37272	5	4
4390500	8	4
4438300	7	12
4485900042	7	6
44863	7	26
44864	7	26
4486500	7	5
505877	13	15
5588618-13	10	15
56Z218	16	2
5939830	3	9
627-100-GOVT	10	9
6814	7	29

PART NUMBER	FIG.	ITEM
7214	2	3
743-123-154	11	1
7493	15	14
7536	4	5
7820	7	4
	8	11
7976	8	10
81000129	6	7
84000139	6	8
8747908	1	1
90054A291	1	3
	13	3
	13	13
90619D	10	12
90640	9	4
9089324	9	9
91901	9	3
9251100	9	5
9422305	15	30
9776	7	23
9777	7	23
9784	7	17
9785	7	20
9790	7	28
9791	7	19
9794	7	22
9795	7	21
98320A625	13	20
	15	16
98416A409	13	14

END OF WORK PACKAGE

CHAPTER 8

SUPPORTING INFORMATION

FIELD MAINTENANCE REFERENCES

SCOPE

This work package lists all field manuals, forms, technical manuals, and miscellaneous publications that are referenced in this manual and that apply to the operation and field maintenance of the M1101, M1102, and Chassis Trailers.

PUBLICATION INDEX

DA PAM 25-30, Consolidated Index of Army Publications and Blank Forms, should be consulted frequently for changes or revisions and for new publications relating to material covered in this technical manual.

FORMS

Refer to DA PAM 750-8, The Army Maintenance Management System (TAMMS) Users Manual, for instructions on the use of maintenance forms.

DA Form 2028	Recommended Changes to Publications and Blank Forms
DA Form 2028-E	Recommended Changes to Publications and Blank Forms (EGA)
DA Form 2404	Equipment Inspection and Maintenance Worksheet
DA Form 2407	Maintenance Request
DA Form 2408-9	Equipment Control Record
DA Form 5988-E	Equipment Inspection and Maintenance Worksheet
DD Form 314	Preventive Maintenance Schedule and Record
DD Form 1397	Processing and Deprocessing Record for Shipment, Storage and Issue of Vehicles and Spare Engines
SF Form 364	Report of Discrepancy (ROD)
SF Form 368	Product Quality Deficiency Report (PQDR)

FIELD MANUALS

FM 4-25.11	First Aid
FM 9-207	Operation and Maintenance of Ordnance Materiel in Cold Weather

TECHNICAL BULLETINS

TB SIG 222	Solder and Soldering
TB 43-0209	Color, Marking, and Camouflage Painting of Military Vehicles, Construction Equipment, and Materials Handling Equipment

TECHNICAL MANUALS

TM 9-214	Inspection, Care and Maintenance of Antifriction Bearings
TM 9-2320-280-20-2	Unit Maintenance Volume No. 2 of 3 Truck, Utility
TM 43-0139	Painting Instructions for Army Materiel
TM 55-2200-001-12	Transportability Guidance for Application of Blocking, Bracing and Tiedown Materials for Rail Transport
TM 750-244-6	Procedures for Destruction of Tank-Automotive Equipment to Prevent Enemy Use

TRAINING CIRCULAR

TC 21-305-20	Manual for the Wheeled Vehicle Operator

OTHER PUBLICATIONS

AFI 21-101	Aircraft and Equipment Maintenance Management
AR 385-10	The Army Safety Program
AR 700-15	Packaging of Materiel
CTA 8-100	Army Medical Department Expendable/Durable Items
CTA 50-909	Field and Garrison Furnishings and Equipment
CTA 50-970	Expendable/Durable Items (Except Medical, Class V, Repair Parts, and Heraldic Items)
DA PAM 25-30	Consolidated Index of Army Publications and Blank Forms
DA PAM 750-8	The Army Maintenance Management System (TAMMS) Users Manual
TO 00-20	Technical Orders

END OF WORK PACKAGE

FIELD MAINTENANCE
MAINTENANCE ALLOCATION CHART (MAC) INTRODUCTION

THE ARMY MAINTENANCE SYSTEM MAC

INTRODUCTION

This introduction provides a general explanation of all maintenance and repair functions authorized at the two maintenance levels under the Two-Level Maintenance System concept.

This MAC (immediately following the introduction) designates overall authority and responsibility for the performance of maintenance functions on the identified end item or component. The application of the maintenance functions to the end item or component shall be consistent with the capacities and capabilities of the designated maintenance levels, which are shown on the MAC in column (4) as:

- Maintainer – includes two subcolumns, Crew (C) and Maintainer (F)
- Sustainment – includes two subcolumns, Below Depot (H) and Depot (D)

The maintenance to be performed at field and sustainment levels is described as follows:

1. **Crew maintenance.** The responsibility of a using organization to perform maintenance on its assigned equipment. It normally consists of inspecting, servicing, lubricating, adjusting, and replacing parts, minor assemblies, and subassemblies. The replace function for this level of maintenance is indicated by the letter "C" in the third position of the SMR code. A "C" appearing in the fourth position of the SMR code indicates complete repair is possible at the crew maintenance level.
2. **Maintainer maintenance.** Maintenance accomplished on a component, accessory, assembly, subassembly, plug-in unit, or other portion either on the system or after it is removed. The replace function for this level of maintenance is indicated by the letter "F" appearing in the third position of the SMR code. An "F" appearing in the fourth position of the SMR code indicates complete repair is possible at the field maintenance level. Items are returned to the user after maintenance is performed at this level.
3. **Below depot sustainment.** Maintenance accomplished on a component, accessory, assembly, subassembly, plug-in unit, or other portion either on the system or after it is removed. The replace function for this level of maintenance is indicated by the letter "H" appearing in the third position of the SMR code. An "H" appearing in the fourth position of the SMR code indicates complete repair is possible at the below depot sustainment maintenance level. Items are returned to the supply system after maintenance is performed at this level.
4. **Depot sustainment.** Maintenance accomplished on a component, accessory, assembly, subassembly, plug-in unit, or other portion either on the system or after it is removed. The replace function for this level of maintenance is indicated by the letter "D" or "K" appearing in the third position of the SMR code. Depot sustainment maintenance can be performed by either depot personnel or contractor personnel. A "D" or "K" appearing in the fourth position of the SMR code indicates complete repair is possible at the depot sustainment maintenance level. Items are returned to the supply systems after maintenance is performed at this level.

The tools and test equipment requirements table (immediately following the MAC) lists the tools and test equipment (both special tools and common tool sets) required for each maintenance function as referenced from the MAC.

The remarks table (immediately following the tools and test equipment requirements) contains supplemental instructions and explanatory notes for a particular maintenance function.

THE ARMY MAINTENANCE SYSTEM MAC - Continued

Maintenance Functions

Maintenance functions are limited to and defined as follows:

1. **Inspect.** To determine the serviceability of an item by comparing its physical, mechanical, and/or electrical characteristics with established standards through examination (e.g., by sight, sound, or feel). This includes scheduled inspection and gaugings and evaluation of cannon tubes.
2. **Test.** To verify serviceability by measuring the mechanical, pneumatic, hydraulic, or electrical characteristics of an item and comparing those characteristics with prescribed standards on a scheduled basis, i.e., load testing of lift devices and hydrostatic testing of pressure hoses.
3. **Service**. Operations required periodically to keep an item in proper operating condition; i.e., to clean (includes decontaminate, when required), to preserve, to drain, to paint, or to replenish fuel, lubricants, chemical fluids, or gases. This includes scheduled exercising and purging of recoil mechanisms. The following are examples of service functions:
    a. **Unpack.** To remove from packing box for service or when required for the performance of maintenance operations.
    b. **Repack.** To return item to packing box after service and other maintenance operations.
    c. **Clean.** To rid the item of contamination.
    d. **Touch up.** To spot paint scratched or blistered surfaces.
    e. **Mark.** To restore obliterated identification.
4. **Adjust.** To maintain or regulate, within prescribed limits, by bringing into proper position, or by setting the operating characteristics to specified parameters.
5. **Align.** To adjust specified variable elements of an item to bring about optimum or desired performance.
6. **Calibrate.** To determine and cause corrections to be made or to be adjusted on instruments of test, measuring, and diagnostic equipment used in precision measurement. Consists of comparisons of two instruments, one of which is a certified standard of known accuracy, to detect and adjust any discrepancy in the accuracy of the instrument being compared.
7. **Remove/Install.** To remove and install the same item when required to perform service or other maintenance functions. "Install" may be the act of emplacing, seating, or fixing into position a spare, repair part, or module (component or assembly) in a manner to allow the proper functioning of an equipment or system.
8. **Paint (ammunition only).** To prepare and spray color coats of paint so that the ammunition can be identified and protected. The color indicating primary use is applied, preferably, to the entire exterior surface as the background color of the item. Other markings are to be repainted as original so as to retain proper ammunition identification.
9. **Replace.** To remove an unserviceable item and install a serviceable counterpart in its place. "Replace" is authorized by the MAC and assigned maintenance level is shown as the third position code of the Source, Maintenance and Recoverability (SMR) code.
10. **Repair.** The application of maintenance services, including fault location/troubleshooting, removal/installation, disassembly/assembly procedures, and maintenance actions to identify troubles and restore serviceability to an item by correcting specific damage, fault, malfunction, or failure in a part, subassembly, module (component or assembly), end item, or system.

THE ARMY MAINTENANCE SYSTEM MAC - Continued

NOTE

- The following definitions are applicable to the "repair" maintenance function:
- **Services.** Inspect, test, service, adjust, align, calibrate, and/or replace.
- **Fault location/troubleshooting.** The process of investigating and detecting the cause of equipment malfunctioning; the act of isolating a fault within a system or Unit Under Test (UUT).
- **Disassembly/assembly.** The step-by-step breakdown (taking apart) of a spare/functional group coded item to the level of its least component, that is assigned an SMR code for the level of maintenance under consideration (i.e., identified as maintenance significant).
- **Actions.** Welding, grinding, riveting, straightening, facing, machining, and/or resurfacing.

11. **Overhaul.** That maintenance effort (service/action) prescribed to restore an item to a completely serviceable/operational condition as required by maintenance standards in appropriate technical publications. Overhaul is normally the highest degree of maintenance performed by the Army. Overhaul does not normally return an item to like new condition.
12. **Rebuild.** Consists of those services/actions necessary for the restoration of unserviceable equipment to a like new condition in accordance with original manufacturing standards. Rebuild is the highest degree of material maintenance applied to Army equipment. The rebuild operation includes the act of returning to zero those age measurements (e.g., hours/miles) considered in classifying Army equipment/components.

Explanation of Columns in the MAC

Column (1) Group Number. Column (1) lists Functional Group Code (FGC) numbers, the purpose of which is to identify maintenance significant components, assemblies, subassemblies, and modules with the Next Higher Assembly (NHA).

Column (2) Component/Assembly. Column (2) contains the item names of components, assemblies, subassemblies, and modules for which maintenance is authorized.

Column (3) Maintenance Function. Column (3) lists the functions to be performed on the item listed in column (2). (For a detailed explanation of these functions refer to "Maintenance Functions" outlined above).

Column (4) Maintenance Level. Column (4) specifies each level of maintenance authorized to perform each function listed in column (3), by indicating work time required (expressed as man-hours in whole hours or decimals) in the appropriate subcolumn. This work time figure represents the active time required to perform that maintenance function at the indicated level of maintenance. If the number or complexity of the tasks within the listed maintenance function varies at different maintenance levels, appropriate work time figures are to be shown for each level. The work time figure represents the average time required to restore an item (assembly, subassembly, component, module, end item, or system) to a serviceable condition under typical field operating conditions. This time includes preparation time (including any necessary disassembly/assembly time), troubleshooting/fault location time, and quality assurance time in addition to the time required to perform the specific tasks identified for the maintenance functions authorized in the MAC. The symbol designations for the various maintenance levels are as follows:

Maintainer:	
C	Crew maintenance
F	Maintainer maintenance

THE ARMY MAINTENANCE SYSTEM MAC - Continued

Sustainment:	
L	Specialized Repair Activity (SRA)
H	Below depot maintenance
D	Depot maintenance

NOTE

The "L" maintenance level is not included in column (4) of the MAC. Functions to this level of maintenance are identified by work time figure in the "H" column of column (4), and an associated reference code is used in the REMARKS column (6). This code is keyed to the remarks and the SRA complete repair application is explained there.

Column (5) Tools and Equipment Reference Code. Column (5) specifies, by code, those common tool sets (not individual tools), common Test, Measurement, and Diagnostic Equipment (TMDE), and special tools, special TMDE and special support equipment required to perform the designated function. Codes are keyed to the entries in the tools and test equipment table.

Column (6) Remarks Code. When applicable, this column contains a letter code, in alphabetical order, which is keyed to the remarks table entries.

Explanation of Columns in the Tools and Test Equipment Requirements

Column (1) Tool or Test Equipment Reference Code. The tool or test equipment reference code correlates with a code used in column (5) of the MAC.

Column (2) Maintenance Level. The lowest level of maintenance authorized to use the tool or test equipment.

Column (3) Nomenclature. Name or identification of the tool or test equipment.

Column (4) National Stock Number (NSN). The NSN of the tool or test equipment.

Column (5) Tool Number. The manufacturer's part number.

Explanation of Columns in the Remarks

Column (1) Remarks Code. The code recorded in column (6) of the MAC.

Column (2) Remarks. This column lists information pertinent to the maintenance function being performed as indicated in the MAC.

END OF WORK PACKAGE

FIELD MAINTENANCE
MAINTENANCE ALLOCATION CHART (MAC)

Table 1. MAC for Trailer, Cargo: Light, Two-Wheel M1101; Trailer, Cargo: Heavy, Two-Wheel M1102 Chassis, Trailer: Two-Wheel.

(1) GROUP NUMBER	(2) COMPONENT/ ASSEMBLY	(3) MAIN-TENANCE FUNCTION	(4) MAINTENANCE LEVEL				(5) TOOLS AND EQUIPMENT REFERENCE CODE	(6) REMARKS CODE
			FIELD		SUSTAINMENT			
			CREW	MAIN-TAINER	BELOW DEPOT	DEPOT		
			C	F	H	D		
00	M1101, M1102 Trailers							
0000–01	PMCS (Before)	Inspect	0.2					
0000–02	PMCS (After)	Inspect	0.2					
0000–03	PMCS (Weekly)	Inspect	0.2					
0000–04	PMCS (Semiannually)	Inspect		3.0				
		Service		3.0				
06	Electrical System							
0608–00	Wiring Harness Clip	Replace		0.3			1, 2	
0609–00	Taillight, Vehicular	Replace		0.3			2	A
0609–01	Light Marker, Clearance, Amber	Replace		0.1			1, 2	
0609–02	Light Marker, Clearance, Red	Replace		0.1			1, 2	
0613–00	Cable, Intervehicular	Replace		1.5			1, 2	
0613–01	Wiring Harness, Branched	Replace		2.0			1, 2	
		Repair		0.5			1, 2	
10	Axle							
1000–00	Axle Assembly	Replace		5.5			1, 2	

Table 1. MAC for Trailer, Cargo: Light, Two-Wheel M1101; Trailer, Cargo: Heavy, Two-Wheel M1102 Chassis, Trailer: Two-Wheel - Continued.

(1) GROUP NUMBER	(2) COMPONENT/ ASSEMBLY	(3) MAIN-TENANCE FUNCTION	(4) MAINTENANCE LEVEL				(5) TOOLS AND EQUIPMENT REFERENCE CODE	(6) REMARKS CODE
			FIELD		SUSTAINMENT			
			CREW	MAIN-TAINER	BELOW DEPOT	DEPOT		
			C	F	H	D		
12	Brakes							
1201–00	Handbrakes	Replace		2.0			2	
		Repair		0.5			1, 2	
		Adjust	0.5					
1202–00	Brake Assemblies	Replace		2.0			1, 2	B
		Repair		0.5			1, 2	
		Adjust		0.5			1, 2	
1204–00	Actuator Assembly, Brake	Repair		1.0			1, 2	C
		Replace		2.0			1, 2	
1204–01	Cylinder Assembly, Master	Replace		1.0			1, 2	
1204–02	Brake Line, Hydraulic	Replace		1.0			1, 2	
13	Wheels							
1311–00	Wheel Assembly Drum, Brake	Replace		1.0			1, 2	
1311–01	Hub Bearings, Wheel	Replace		1.5			1, 2	D
1311–02	Wheel and Tire Assembly	Replace	0.5				1, 2	
15	Frame, Towing Attachments, and Drawbars							
1503–00	Chains, Safety	Replace		0.5			1, 2	
1507–00	Landing Gear, Leveling Jacks: Leg, Support, Front (Adjustable)	Repair		1.0			2	E

Table 1. MAC for Trailer, Cargo: Light, Two-Wheel M1101; Trailer, Cargo: Heavy, Two-Wheel M1102 Chassis, Trailer: Two-Wheel - Continued.

(1) GROUP NUMBER	(2) COMPONENT/ ASSEMBLY	(3) MAIN-TENANCE FUNCTION	(4) MAINTENANCE LEVEL				(5) TOOLS AND EQUIPMENT REFERENCE CODE	(6) REMARKS CODE
			FIELD		SUSTAINMENT			
			CREW	MAIN-TAINER	BELOW DEPOT	DEPOT		
			C	F	H	D		
		Replace		1.5			2	
1507–01	Leveling Jacks: Leg, Support, Rear (Adjustable)	Repair		1.0			1, 2	
		Replace	0.5					
16	Springs and Shock Absorbers							
1604–00	Absorber, Shock	Replace		0.5			1, 2	
18	Body, Cab, Hood, and Hull							
1810–00	Tailgate	Repair		0.6			1, 2	G
		Replace		1.0			1, 2	
1810–01	Tiedowns	Replace		0.5			1, 2	
1810–02	Shackles	Replace		0.5			2	
1810–03	Cargo Body	Repair		1.0			1, 2	F
22	Body, Chassis or Hull, and Accessory Items							
2202–00	Reflectors	Replace		0.5			2	
2202–01	Bracket, Decontamination	Replace		0.2			2, 3	
2210–00	Data Plates and Instruction Holders Plate, Identification	Replace		1.0			1, 2	
2210–01	Plate, Shipping Data	Replace		1.0			1, 2	
33	Special Purpose Kits							

Table 1. MAC for Trailer, Cargo: Light, Two-Wheel M1101; Trailer, Cargo: Heavy, Two-Wheel M1102 Chassis, Trailer: Two-Wheel - Continued.

(1) GROUP NUMBER	(2) COMPONENT/ ASSEMBLY	(3) MAIN-TENANCE FUNCTION	(4) MAINTENANCE LEVEL				(5) TOOLS AND EQUIPMENT REFERENCE CODE	(6) REMARKS CODE
			FIELD		SUSTAINMENT			
			CREW	MAIN-TAINER	BELOW DEPOT	DEPOT		
			C	F	H	D		
3307–00	Special Purpose Kits, Soft Top Kit Option	Replace		1.0			2	
		Repair		0.5			2, 3	

Table 2. Tools and Test Equipment Requirements.

TOOL OR TEST EQUIPMENT REFERENCE CODE	MAINTENANCE LEVEL	NOMENCLATURE	NATIONAL STOCK NUMBER (NSN)	TOOL NUMBER
1	F	Standard Automotive Tool Set (SATS)	4910-01-490-6453	Base
2	F	Tool Kit, General Mechanic's	5180-01-548-7634	PD484
3	F	Threaded Insert Tool	5120-01-586-8006	AA184-616

Table 3. Remarks.

REMARKS CODE	REMARKS
A	Repair consists of replacing lens, gasket, and lamp units.
B	Repair consists of replacing brakeshoes, springs, adjuster, and wheel cylinder.
C	Repair consists of replacing shock bolt/nut, nylon bearings, push rod, push rod spring, ring, links, breakaway lever, breakaway chain, breakaway bolt/nut, shafts, nuts, and lunette.
D	Repair consists of replacing inner bearing, outer bearing, grease seal, zerk fitting, and end cap.
E	Repair consists of replacing caster, pin, and lanyard.
F	Repair to body consists of straightening, patching, and riveting. In this category, no specific times can be established. Time required for repair will depend on the extent of repair required for damaged components.
G	Repair consists of replacing capscrews, washers, locknuts, tailgate lanyard mount, lanyards, pins, latch assemblies, and tailgate hinges.

END OF WORK PACKAGE

FIELD MAINTENANCE
COMPONENTS OF END ITEM (COEI) AND BASIC ISSUE ITEMS (BII) LISTS

INTRODUCTION

Scope

This work package lists COEI and BII for the M1101, M1102, and Chassis Trailers to help you inventory items for safe and efficient operation of the equipment.

General

The COEI and BII information is divided into the following lists:

Components of End Item (COEI). This list is for information purposes only and is not authority to requisition replacements. These items are part of the M1101, M1102, and Chassis Trailers. As part of the end item, these items must be with the end item whenever it is issued or transferred between property accounts. Items of COEI are removed and separately packaged for transportation or shipment only when necessary. Illustrations are furnished to help you find and identify the items.

Basic Issue Items (BII). These essential items are required to place the M1101, M1102, and Chassis Trailers in operation, operate them, and to do emergency repairs. Although shipped separately packaged, BII must be with the M1101, M1102, and Chassis Trailers during operation and when it is transferred between property accounts. Listing these items is your authority to request/requisition them for replacement based on authorization of the end item by the TOE/MTOE. Illustrations are furnished to help you find and identify the items.

Explanation of Columns in the COEI List and BII List

Column (1) Illus Number. Gives you the number of the item illustrated.

Column (2) National Stock Number (NSN). Identifies the stock number of the item to be used for requisitioning purposes.

Column (3) Description, Part Number/(CAGEC). Identifies the Federal item name (in all capital letters) followed by a minimum description when needed. The stowage location of COEI and BII is also included in this column. The last line below the description is the part number and the Commercial and Government Entity Code (CAGEC) (in parentheses).

Column (4) Usable On Code. When applicable, gives you a code if the item you need is not the same for different models of equipment. These codes are identified below:

Code	Used on
CMT	Trailer Chassis
HMT	Cargo Trailer M1102
LMT	Cargo Trailer M1101

Column (5) U/I. Unit of Issue (U/I) indicates the physical measurement or count of the item as issued per the National Stock Number shown in column (2).

Column (6) Qty Rqr. Indicates the quantity required.

Table 1. Components of End Item (COEI) List.

(1) ITEM NUMBER	(2) NATIONAL STOCK NUMBER (NSN) AND ILLUSTRATION	(3) DESCRIPTION, PART NUMBER/(CAGEC)	(4) USABLE ON CODE	(5) U/I	(6) QTY RQR
1		None required.			

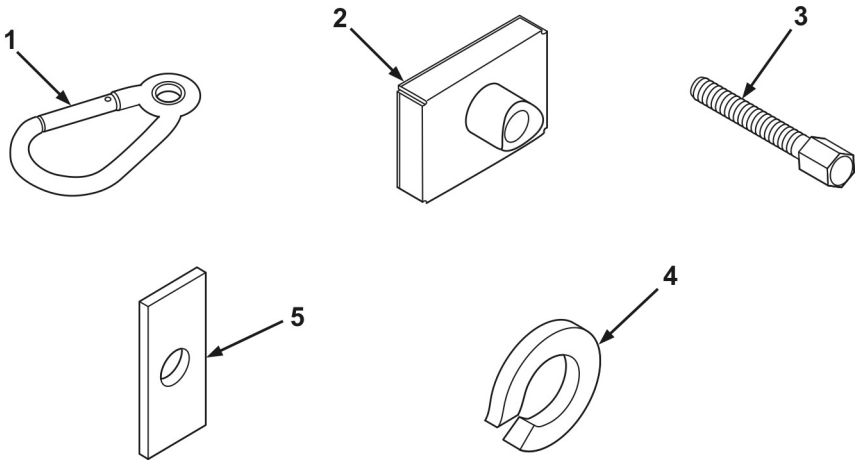

Table 2. Basic Issue Items (BII) List.

(1) ILLUS NUMBER	(2) NATIONAL STOCK NUMBER (NSN)	(3) DESCRIPTION, PART NUMBER/(CAGEC)	(4) USABLE ON CODE	(5) U/I	(6) QTY RQR
1	5340-01-418-3751	HOOK, SAFETY-SNAP 12449497 (55175)		EA	1
2	5365-01-483-4905	SPACER, JACK 12449995 (19207)		EA	1
3	5305-01-483-9192	THUMBSCREW 12449993 (19207)		EA	1
4	5310-01-482-9306	WASHER, LOCK 132661 (00198)		EA	1
5	5310-01-482-9306	WASHER, RECTANGULAR 12449994 (19207)		EA	1

END OF WORK PACKAGE

FIELD MAINTENANCE
ADDITIONAL AUTHORIZATION LIST (AAL)

INTRODUCTION

Scope

This work package lists additional items you are authorized for the support of the M1101, M1102, and Chassis Trailers.

General

This list identifies items that do not have to accompany the M1101, M1102, and Chassis Trailers and that do not have to be turned in with them. These items are all authorized to you by CTA, MTOE, TDA, or JTA.

Explanation of Columns in the AAL

Column (1) National Stock Number (NSN). Identifies the stock number of the item to be used for requisitioning purposes.

Column (2) Description, Part Number/(CAGEC). Identifies the Federal item name (in all capital letters) followed by a minimum description when needed. The last line below the description is the part number and the Commercial and Government Entity Code (CAGEC) (in parentheses).

Column (3) Usable On Code. When applicable, gives you a code if the item you need is not the same for different models of equipment. These codes are identified below:

Code	Used on
CMT	Trailer Chassis
HMT	Cargo Trailer M1102
LMT	Cargo Trailer M1101

Column (4) U/I. Unit of Issue (U/I) indicates the physical measurement or count of the item as issued per the National Stock Number shown in column (1).

Column (5) Qty Recm. Indicates the quantity recommended.

Table 1. Additional Authorization List (AAL).

(1) NATIONAL STOCK NUMBER (NSN)	(2) DESCRIPTION, PART NUMBER/(CAGEC)	(3) USABLE ON CODE	(4) U/I	(5) QTY RECM
2540-01-483-5853	ACCESSORY KIT, VEHICLE BODY, CARGO NET 57K4380 (19207)	HMT, LMT		As Rqd
2540-00-678-3469	CHOCK, WHEEL-TRACK 7979235 (19207)			2
2540-01-498-8201	COVER, FITTED, VEHICULAR CAB, WOODLAND CAMO (COVER ONLY) 12470989-1 (19207)			1
5325-01-483-7480	INSERTS AALS4-616-150 (78276)		EA	14
5325-01-459-5008	INSERTS AALS4-616-312 (78276)		EA	21
2540-01-484-2632	KIT, CANVAS, TAN 57K4154 (19207)	HMT, LMT	EA	1
2540-01-199-6761	.BOW, VEHICULAR TOP (SHORT) 12340764-1 (19207)			2
2540-01-199-6760	.BOW, VEHICULAR TOP (LONG) 12340747 (19207)			2
5340-01-487-0636	.BRACKET, DOUBLE ANGLE (FRONT/ REAR) 12449605-1 (19207)			4
5340-01-485-6884	.BRACKET, DOUBLE ANGLE (MID) 12449606-1 (19207)			4
2540-01-493-7897	.COVER, FITTED, VEHICULAR CAB, TAN (COVER ONLY) 12470989-3 (19207)	HMT, LMT		1
2540-01-413-6985	.COVER, FITTED, VEHICULAR, WOODLAND CAMOUFLAGE 57K4152 (19207)		EA	1
2510-01-522-2109	.PANEL, TOP, VEHICULAR (FRONT) 12470990-1 (19207)			1
2510-01-522-2107	.PANEL, TOP, VEHICULAR (MID) 12470991-1 (19207)			1
2510-01-522-2110	.PANEL, TOP, VEHICULAR (REAR) 12470992-2 (19207)			1
5305-01-140-9118	.SCREW, CAP, HEXAGON HEAD B1821BH038C088N (80204)			32
5305-01-301-5974	.SCREW, TAPPING #10 × 1/2 IN. 90190A242 (39428)			8

Table 1. Additional Authorization List (AAL) - Continued.

(1) NATIONAL STOCK NUMBER (NSN)	(2) DESCRIPTION, PART NUMBER/(CAGEC)	(3) USABLE ON CODE	(4) U/I	(5) QTY RECM
5310-01-385-7083	.WASHER, FLAT MS51412-27 (96906)			32
5310-01-234-9416	.WASHER, FLAT MS51412-2 (96906)			8
5310-01-218-7137	.WASHER, LOCK MS51415-7 (96906)			32
5120-01-586-8006	THREADED INSERT TOOL AA184-616 (78276)		EA	1
3990-01-204-3009	TIE DOWN, CARGO, VEHICLE MIL-PRF-71224-1 (0KHZ6)			As Rqd

END OF WORK PACKAGE

FIELD MAINTENANCE
EXPENDABLE AND DURABLE ITEMS LIST

INTRODUCTION

Scope

This work package lists expendable and durable items that you will need to operate and maintain the M1101, M1102, and Chassis Trailers. This list is for information only and is not authority to requisition the listed items. These items are authorized to you by CTA 50-970, Expendable/Durable Items (Except Medical, Class V, Repair Parts, and Heraldic Items), CTA 50-909, Field and Garrison Furnishings and Equipment or CTA 8-100, Army Medical Department Expendable/Durable Items.

Explanation of Columns in the Expendable and Durable Items List

Column (1) Item No. This number is assigned to the entry in the list and is referenced in the narrative instructions to identify the item (e.g., Use brake fluid (WP 0095, Item 2)).

Column (2) Level. This column identifies the lowest level of maintenance that requires the listed item (C = Crew, F = Field, H = Below Depot, D = Depot).

Column (3) National Stock Number (NSN). This is the NSN assigned to the item which you can use to requisition it.

Column (4) Item Name, Description, Part Number/(CAGEC). This column provides the other information you need to identify the item. The last line below the description is the part number and the Commercial and Government Entity Code (CAGEC) (in parentheses).

Column (5) U/I. Unit of Issue (U/I) code shows the physical measurement or count of an item, such as gallon, dozen, gross, etc.

Table 1. Expendable and Durable Items List.

(1) ITEM NO.	(2) LEVEL	(3) NATIONAL STOCK NUMBER (NSN)	(4) ITEM NAME, DESCRIPTION, PART NUMBER/(CAGEC)	(5) U/I
1	F	8030-00-251-3980	Antiseize Compound MIL-PRF-907 (81349)	LB
2	C	9150-01-102-9455	Brake Fluid, Automotive 1-Gallon Can MIL-PRF-46176 (81349)	GL
3	C	9150-01-123-3152	Brake Fluid, Automotive 5-Gallon Can MIL-PRF-46176 (81349)	CN
4	C	7920-00-061-0038	Brush, Scrub 4054000 (15398)	EA
5	C	7920-00-900-3577	Brush, Wire 15SS (17987)	EA
6	F	6850-01-474-2319	Cleaning Solvent, Type II 1-Gallon Can MIL-PRF-680 (81349)	GL
7	F	6850-01-474-2317	Cleaning Solvent, Type II 5-Gallon Can MIL-PRF-680 (81349)	CO
8	F	6850-01-474-2316	Cleaning Solvent, Type II 55-Gallon Drum MIL-PRF-680 (81349)	DR
9	F	7930-00-282-9699	Detergent, General Purpose 1-Gallon Can MIL-D-16791 (81349)	GL
10	F	9150-01-197-7693	Grease, Automotive and Artillery 14-Ounce Cartridge MIL-PRF-10924 (81349)	CA
11	F	9150-01-197-7690	Grease, Automotive and Artillery 1-3/4-Pound Can MIL-PRF-10924 (81348)	CN
12	F	9150-01-197-7689	Grease, Automotive and Artillery 6-1/2-Pound Can MIL-PRF-10924 (81348)	CN
13	F	9150-01-197-7692	Grease, Automotive and Artillery 35-Pound Can MIL-PRF-10924 (81348)	CN
14	F	5970-01-537-8799	Insulation Sleeving, Convoluted 1/2 Inch by 25 Feet 7840K13 (39428)	CL
15	F	5970-01-587-3677	Insulation Sleeving, Convoluted 3/4 Inch by 25 Feet 7840K15 (39428)	EA
16	F	8030-00-148-9833	Loctite: Sealing Compound ASTM D5363 (81346)	BX
17	F	8030-01-025-1692	Loctite: Sealing Compound LOCTITE 242 (F6033)	BT
18	F	9150-01-481-9983	Lubricant, Dry DRI-SLIDE (IKIK3)	BX
19	F	9150-00-402-4478	Oil, Lubricating, Engine, OEA 1-Quart Can MIL-PRF-46167 (81349)	QT
20	F	9150-00-402-2372	Oil, Lubricating, Engine, OEA 5-Gallon Can MIL-PRF-46167 (81349)	CN

Table 1. Expendable and Durable Items List - Continued.

(1) ITEM NO.	(2) LEVEL	(3) NATIONAL STOCK NUMBER (NSN)	(4) ITEM NAME, DESCRIPTION, PART NUMBER/(CAGEC)	(5) U/I
21	F	9150-00-491-7197	Oil, Lubricating, Engine, OEA 55-Gallon Drum MIL-PRF-46167 (81349)	DR
22	F	9150-00-189-6727	Oil, Lubricating, Engine, OE/HDO 10 1-Quart Can MIL-PRF-2104 (81349)	QT
23	F	9150-00-186-6668	Oil, Lubricating, Engine, OE/HDO 10 1-Gallon Can MIL-PRF-2104 (81349)	CN
24	F	9150-00-191-2772	Oil, Lubricating, Engine, OE/HDO 10 55-Gallon Drum MIL-PRF-2104 (81349)	DR
25	F	9150-00-186-6681	Oil, Lubricating, Engine, OE/HDO 30 1-Quart Can MIL-PRF-2104 (81349)	QT
26	F	9150-00-188-9858	Oil, Lubricating, Engine, OE/HDO 30 5-Gallon Can MIL-PRF-2104 (81349)	CN
27	F	9150-00-189-6729	Oil, Lubricating, Engine, OE/HDO 30 55-Gallon Drum MIL-PRF-2104 (81349)	DR
28	C	7920-00-205-1711	Rag, Wiping 50-Pound Bale 7920-00-205-1711 (58536)	BE
29	F	5975-00-984-6582	Strap, Tiedown, Electrical 100 Each MS3367-1-0 (96906)	HD
30	F	9905-00-537-8954	Tag, Marker 50 Each 9905-00-537-8954 (64067)	BD
31	F	9330-01-345-0507	Tape, Adhesive, Acrylic 60-Yard Roll 353191 (30076)	RO

END OF WORK PACKAGE

DEPOT MAINTENANCE
TOOL IDENTIFICATION LIST

SCOPE

This work package lists all common tools and supplements and special tools/fixtures needed to maintain the M1101, M1102, and Chassis Trailers.

Most PM-SKOT products have lifetime warranties and replacement capabilities and are supported world-wide through PM-SKOT. The PM-SKOT implemented a Web-based tool replacement and warranty program in May 2005 for tools authorized in SKO. User may access the online program by first accessing the PM-SKOT Web site at https://pmskot.army.mil and clicking on the Tool Replacement/Warranty banner.

Explanation of Columns in the Tool Identification List

Column (1) Item No. This number is assigned to the entry in the list and is referenced in the initial setup to identify the item (e.g., Jack Stands (WP 0096, Item 10)).

Column (2) Item Name. This column lists the item by noun nomenclature and other descriptive features (e.g., Tool Kit, General Mechanic's).

Column (3) National Stock Number (NSN). This is the National Stock Number (NSN) assigned to the item; use it to requisition the item.

Column (4) Part Number/(CAGEC). Indicates the primary number used by the manufacturer (individual, company, firm, corporation, or Government activity) which controls the design and characteristics of the item by means of its engineering drawings, specifications, standards, and inspection requirements to identify an item or range of items. The manufacturer's Commercial and Government Entity Code (CAGEC) is also included.

Column (5) Reference. This column identifies the authorizing supply catalog or RPSTL for items listed in this work package.

Table 1. Tool Identification List.

(1) ITEM NO.	(2) ITEM NAME	(3) NATIONAL STOCK NUMBER (NSN)	(4) PART NUMBER/ (CAGEC)	(5) REFERENCE
1	Tool Kit, General Mechanic's	5180-01-548-7634	PD484 (19200)	
2	Tool Set, SATS, Base	4910-01-490-6453	SC 4910-95-A81 (59678)	
3	Crimping Tool, Terminal	-	KTC S0159 (00NS2)	SATS CL 4910-95-A81
4	Die Set, Metal Stamping: 3/16-in. Heavy Duty	-	KTC S1001 (00NS2)	SATS CL 4910-95-A81
5	Die Set, Metal Stamping: 3/16-in. Standard	-	KTC S1000 (00NS2)	SATS CL 4910-95-A81

Table 1. Tool Identification List - Continued.

(1) ITEM NO.	(2) ITEM NAME	(3) NATIONAL STOCK NUMBER (NSN)	(4) PART NUMBER/ (CAGEC)	(5) REFERENCE
6	Drill, Electric	-	KTC S0189 (00NS2)	SATS CL 4910-95-A81
7	Drill Bit, 1/2-in.-diameter	-	KTC S0194 (00NS2)	SATS CL 4910-95-A81
8	Filler and Bleeder Kit	-	KTC S0202 (00NS2)	SATS CL 4910-95-A81
9	Jack, Hydraulic	4910-00-289-7233		SATS CL 4910-95-A81
10	Jack Stands	4910-00-251-8013		SATS CL 4910-95-A81
11	Threaded Insert Tool	5120-01-586-8006	AA184-616 (78276)	TM 9-2330-392-13&P
12	Tool Kit, Blind Riveter	5180-01-470-6539	KTC S0700 (00NS2)	SATS CL 4910-95-A81
13	Wrench: 1-1/2-in.	-	KTC S0793 (00NS2)	SATS CL 4910-95-A81
14	Wrench, Torque: 1/2-in. drive, 30-250 lb-ft	5120-01-276-7016	KTC S0991 (00NS2)	SATS CL 4910-95-A81
15	Wrench, Torque: 3/8-in. drive, 0-300 lb-in.	-	KTC S0987 (00NS2)	SATS CL 4910-95-A81
16	Wrench, Torque: 3/8-in. drive 5-75 lb-ft	5130-01-464-5070	KTC S0989 (00NS2)	SATS CL 4910-95-A81

END OF WORK PACKAGE

INDEX

Subject **WP Sequence No.-Page No.**

A

ACCESSORY ITEMS..... WP 0084-1
ADDITIONAL AUTHORIZATION LIST (AAL)..... WP 0094-1
AXLE ASSEMBLY..... WP 0073-1
AXLE ASSEMBLY INSPECTION AND REPLACEMENT..... WP 0035-1

B

BRAKE ACTUATOR ASSEMBLY..... WP 0076-1
BRAKE DRUM..... WP 0077-1
BRANCHED WIRING HARNESS REPAIR..... WP 0033-1
BRANCHED WIRING HARNESS REPLACEMENT..... WP 0032-1
BREAKAWAY LEVER AND LEAF SPRING REPLACEMENT..... WP 0040-1
BULK..... WP 0087-1

C

CARGO BODY MAINTENANCE..... WP 0057-1
CARGO TIEDOWN REPLACEMENT..... WP 0054-1
CLEARANCE LIGHTS..... WP 0071-1
COMPONENTS OF END ITEM (COEI) AND BASIC ISSUE ITEMS (BII) LISTS..... WP 0093-1

D

DATA PLATE AND SHIPPING PLATE REPLACEMENT..... WP 0060-1
DATA PLATES..... WP 0085-1
DECONTAMINATION BRACKET MAINTENANCE..... WP 0059-1
DESCRIPTION AND USE OF OPERATOR CONTROLS AND INDICATORS ..... WP 0004-1

E

EQUIPMENT DESCRIPTION AND DATA..... WP 0002-1
EXPENDABLE AND DURABLE ITEMS LIST..... WP 0095-1

F

FIELD PREVENTIVE MAINTENANCE CHECKS AND SERVICES (PMCS)..... WP 0025-1
FIELD PREVENTIVE MAINTENANCE CHECKS AND SERVICES (PMCS) INTRODUCTION..... WP 0024-1
FIELD TROUBLESHOOTING SYMPTOM INDEX..... WP 0010-1
FIELD TROUBLESHOOTING – AXLE..... WP 0017-1
FIELD TROUBLESHOOTING – BRAKES..... WP 0018-1
FIELD TROUBLESHOOTING – ELECTRICAL..... WP 0016-1
FIELD TROUBLESHOOTING – FRONT SUPPORT LEG AND CASTER..... WP 0020-1
FIELD TROUBLESHOOTING – SUSPENSION..... WP 0021-1
FIELD TROUBLESHOOTING – WHEELS AND TIRES..... WP 0019-1
FRONT AND SIDE MARKER LIGHTS MAINTENANCE..... WP 0030-1
FRONT SUPPORT LEG AND PIVOT REPAIR..... WP 0049-1

G

GENERAL INFORMATION..... WP 0001-1
GENERAL MAINTENANCE INSTRUCTIONS..... WP 0027-1

INDEX - Continued

Subject **WP Sequence No.-Page No.**

H

HANDBRAKE CABLE AND SHEATH REPLACEMENT..... WP 0037-1
HANDBRAKE LEVER REPLACEMENT..... WP 0036-1
HANDBRAKES..... WP 0074-1
HUB/DRUM, RACE, AND BEARING SEAL MAINTENANCE..... WP 0046-1
HYDRAULIC BRAKE ACTUATOR REPLACEMENT..... WP 0042-1
HYDRAULIC BRAKE LINES REPLACEMENT..... WP 0045-1
HYDRAULIC BRAKE SYSTEM BLEEDING..... WP 0041-1

I

ILLUSTRATED LIST OF MANUFACTURED ITEMS..... WP 0065-1
INTERVEHICULAR CABLE REPLACEMENT..... WP 0034-1

K

KITS..... WP 0086-1

L

LANDING GEAR AND LEVELING JACKS..... WP 0081-1
LUBRICATION INSTRUCTIONS..... WP 0064-1
LUNETTE REPLACEMENT..... WP 0043-1

M

MAINTENANCE ALLOCATION CHART (MAC)..... WP 0092-1
MAINTENANCE ALLOCATION CHART (MAC) INTRODUCTION..... WP 0091-1
MASTER CYLINDER REPLACEMENT..... WP 0044-1

N

NATIONAL STOCK NUMBER (NSN) INDEX..... WP 0088-1

O

OPERATION UNDER UNUSUAL CONDITIONS..... WP 0006-1
OPERATION UNDER USUAL CONDITIONS..... WP 0005-1
OPERATOR PREVENTIVE MAINTENANCE CHECKS AND SERVICES (PMCS)..... WP 0023-1
OPERATOR TROUBLESHOOTING SYMPTOM INDEX..... WP 0009-1
OPERATOR TROUBLESHOOTING – BRAKES..... WP 0012-1
OPERATOR TROUBLESHOOTING – ELECTRICAL..... WP 0011-1
OPERATOR TROUBLESHOOTING – FRONT SUPPORT LEG..... WP 0014-1
OPERATOR TROUBLESHOOTING – SUSPENSION..... WP 0015-1
OPERATOR TROUBLESHOOTING – WHEELS AND TIRES..... WP 0013-1
OPERATOR/CREW PREVENTIVE MAINTENANCE CHECKS AND SERVICES (PMCS)
INTRODUCTION..... WP 0022-1

P

PAINTING AND IDENTIFICATION MARKING..... WP 0062-1
PART NUMBER (P/N) INDEX..... WP 0089-1
PREPARATION FOR STORAGE OR SHIPMENT..... WP 0063-1

INDEX - Continued

Subject **WP Sequence No.-Page No.**

R

REAR MARKER LIGHTS MAINTENANCE.... WP 0031-1
REFERENCES.... WP 0090-1
REFLECTOR AND TIEDOWN LOOP REPLACEMENT.... WP 0058-1
REPAIR PARTS AND SPECIAL TOOLS LIST INTRODUCTION.... WP 0068-1

S

SAFETY CHAIN REPLACEMENT.... WP 0048-1
SAFETY CHAINS.... WP 0080-1
SERVICE UPON RECEIPT.... WP 0026-1
SERVICE BRAKE MAINTENANCE.... WP 0038-1
SERVICE BRAKES.... WP 0075-1
SHACKLE REPLACEMENT.... WP 0055-1
SHOCK ABSORBER MAINTENANCE.... WP 0050-1
SHOCK ABSORBERS.... WP 0082-1
SOFT TOP KIT.... WP 0061-1

T

TAIL LIGHTS.... WP 0070-1
TAILGATE HINGE AND SHIM REPLACEMENT.... WP 0056-1
TAILGATE LANYARD AND MOUNT REPLACEMENT.... WP 0052-1
TAILGATE LATCH ASSEMBLY, LATCH ASSEMBLY PIN, AND LATCHING PIN LANYARD REPLACEMENT.... WP 0053-1
TAILGATE REPLACEMENT.... WP 0051-1
TAILGATE, TIEDOWNS, AND FRONT SUPPORT.... WP 0083-1
TAILLIGHT MAINTENANCE.... WP 0029-1
THEORY OF OPERATION.... WP 0003-1
TIRES.... WP 0079-1
TOOL IDENTIFICATION LIST.... WP 0096-1
TORQUE LIMITS.... WP 0066-1

W

WHEEL AND RUNFLAT ASSEMBLY.... WP 0078-1
WHEEL AND TIRE ASSEMBLY REPAIR.... WP 0047-1
WHEEL AND TIRE ASSEMBLY REPLACEMENT (NEW JACK).... WP 0008-1
WHEEL AND TIRE ASSEMBLY REPLACEMENT (OLD JACK).... WP 0007-1
WHEEL CYLINDER REPLACEMENT.... WP 0039-1
WIRING DIAGRAMS.... WP 0067-1
WIRING HARNESS CLIP.... WP 0069-1
WIRING HARNESS CLIP REPLACEMENT.... WP 0028-1
WIRING HARNESS, BRANCHED.... WP 0072-1

RECOMMENDED CHANGES TO PUBLICATIONS AND BLANK FORMS For use of this form, see AR 25-30; the proponent agency is OAASA.	Use Part II *(reverse)* for Repair Parts and Special Tool Lists (RPSTL) and Supply Catalogs/Supply Manuals (SC/SM).	DATE *Date you filled out this form.*
TO *(Forward to proponent of publication or form) (Include ZIP Code)* U.S. Army TACOM Life Cycle Management Command ATTN: AMSTA-LCL-MPP/TECH PUBS 6501 E. 11 Mile Road, Warren, MI 48397-5000	**FROM** *(Activity and location) (Include ZIP Code)* *Your mailing address*	

PART I – ALL PUBLICATIONS (EXCEPT RPSTL AND SC/SM) AND BLANK FORMS

PUBLICATION/FORM NUMBER	DATE	TITLE
TM Number	*Date of the TM*	*Title of the TM*

ITEM	PAGE	PARA-GRAPH	LINE	FIGURE NO.	TABLE	RECOMMENDED CHANGES AND REASON (Exact wording of recommended change must be given)
	0007-3					*Figure 2, Item 9 should show a lockwasher. Currently shows a flat washer.*
	0018-2					*Cleaning and inspection, Step 6, reference to governor support pin (14) is wrong reference. Reference should be change to (12).*

SAMPLE

TYPED NAME, GRADE OR TITLE	TELEPHONE EXCHANGE/AUTOVON, PLUS EXTENSION	SIGNATURE
Your Name	*Your Phone Number*	*Your Signature*

TO *(Forward direct to addressee listed in publication)*	**FROM** *(Activity and location) (Include ZIP Code)*	**DATE**
U.S. Army TACOM Life Cycle Management Command ATTN: AMSTA-LCL-MPP/TECH PUBS 6501 E. 11 Mile Road, Warren, MI 48397-5000	*Your Address*	*Date you filled out this form*

PART II – REPAIR PARTS AND SPECIAL TOOL LISTS AND SUPPLY CATALOGS/SUPPLY MANUALS

PUBLICATION NUMBER	DATE	TITLE
TM Number	*Date of the TM*	*Title of the TM*

PAGE NO.	COLM NO.	LINE NO.	NATIONAL STOCK NUMBER	REFERENCE NO.	FIGURE NO.	ITEM NO.	TOTAL NO. OF MAJOR ITEMS SUPPORTED	RECOMMENDED ACTION

SAMPLE

PART III – REMARKS *(Any general remarks, or recommendations, or suggestions for improvement of publications and blank forms. Additional blank sheets may be used if more space is needed.)*

TYPED NAME, GRADE OR TITLE	TELEPHONE EXCHANGE/AUTOVON, PLUS EXTENSION	SIGNATURE
Your Name	*Your Phone Number*	*Your Signature*

APD V4.00

RECOMMENDED CHANGES TO PUBLICATIONS AND BLANK FORMS For use of this form, see AR 25-30; the proponent agency is OAASA	Use Part II *(reverse)* for Repair Parts and Special Tool Lists (RPSTL) and Supply Catalogs/Supply Manuals (SC/SM).	**DATE**
TO *(Forward to proponent of publication or form) (Include ZIP Code)* U.S. Army TACOM Life Cycle Management Command ATTN: AMSTA-LCL-MPP/TECH PUBS 6501 E. 11 Mile Road, Warren, MI 48397-5000	**FROM** *(Activity and location) (Include ZIP Code)*	

PART I – ALL PUBLICATIONS (EXCEPT RPSTL AND SC/SM) AND BLANK FORMS

PUBLICATION/FORM NUMBER	DATE	TITLE
TM 9-2330-392-13&P	07 December 2012	Cargo Trailer M1101, M1102, Trailer Chassis

	PAGE	PARA-GRAPH	LINE	FIGURE NO.	TABLE	RECOMMENDED CHANGES AND REASON

TYPED NAME, GRADE OR TITLE	TELEPHONE EXCHANGE/AUTOVON, PLUS EXTENSION	SIGNATURE

TO *(Forward direct to addressee listed in publication)*	**FROM** *(Activity and location) (Include ZIP Code)*	**DATE**
U.S. Army TACOM Life Cycle Management Command ATTN: AMSTA-LCL-MPP/TECH PUBS 6501 E. 11 Mile Road, Warren, MI 48397-5000		

PART II – REPAIR PARTS AND SPECIAL TOOL LISTS AND SUPPLY CATALOGS/SUPPLY MANUALS

PUBLICATION/FORM NUMBER	DATE	TITLE
TM 9-2330-392-13&P	07 December 2012	Cargo Trailer M1101, M1102, Trailer Chassis

PAGE NO.	COLM NO.	LINE NO.	NATIONAL STOCK NUMBER	REFERENCE NO.	FIGURE NO.	ITEM NO.	TOTAL NO. OF MAJOR ITEMS SUPPORTED	RECOMMENDED ACTION

PART III – REMARKS *(Any general remarks, or recommendations, or suggestions for improvement of publications and blank forms. Additional blank sheets may be used if more space is needed.)*

TYPED NAME, GRADE OR TITLE	TELEPHONE EXCHANGE/AUTOVON, PLUS EXTENSION	SIGNATURE

APD V4.00

RECOMMENDED CHANGES TO PUBLICATIONS AND BLANK FORMS For use of this form, see AR 25-30; the proponent agency is OAASA	Use Part II *(reverse)* for Repair Parts and Special Tool Lists (RPSTL) and Supply Catalogs/Supply Manuals (SC/SM).	**DATE**
TO *(Forward to proponent of publication or form) (Include ZIP Code)* U.S. Army TACOM Life Cycle Management Command ATTN: AMSTA-LCL-MPP/TECH PUBS 6501 E. 11 Mile Road, Warren, MI 48397-5000	**FROM** *(Activity and location) (Include ZIP Code)*	

PART I – ALL PUBLICATIONS (EXCEPT RPSTL AND SC/SM) AND BLANK FORMS

PUBLICATION/FORM NUMBER	DATE	TITLE
TM 9-2330-392-13&P	07 December 2012	Cargo Trailer M1101, M1102, Trailer Chassis

ITEM	PAGE	PARA-GRAPH	LINE	FIGURE NO.	TABLE	RECOMMENDED CHANGES AND REASON

TYPED NAME, GRADE OR TITLE	TELEPHONE EXCHANGE/AUTOVON, PLUS EXTENSION	SIGNATURE

TO *(Forward direct to addressee listed in publication)*	**FROM** *(Activity and location) (Include ZIP Code)*	**DATE**
U.S. Army TACOM Life Cycle Management Command ATTN: AMSTA-LCL-MPP/TECH PUBS 6501 E. 11 Mile Road, Warren, MI 48397-5000		

PART II – REPAIR PARTS AND SPECIAL TOOL LISTS AND SUPPLY CATALOGS/SUPPLY MANUALS

PUBLICATION/FORM NUMBER	DATE	TITLE
TM 9-2330-392-13&P	07 December 2012	Cargo Trailer M1101, M1102, Trailer Chassis

PAGE NO.	COLM NO.	LINE NO.	NATIONAL STOCK NUMBER	REFERENCE NO.	FIGURE NO.	ITEM NO.	TOTAL NO. OF MAJOR ITEMS SUPPORTED	RECOMMENDED ACTION

PART III – REMARKS *(Any general remark, or recommendations, or suggestions for improvement of publications and blank forms. Additional blank sheets may be used if more space is needed.)*

TYPED NAME, GRADE OR TITLE	TELEPHONE EXCHANGE/AUTOVON, PLUS EXTENSION	SIGNATURE

APD V4.00

RECOMMENDED CHANGES TO PUBLICATIONS AND BLANK FORMS For use of this form, see AR 25-30; the proponent agency is OAASA	Use Part II *(reverse)* for Repair Parts and Special Tool Lists (RPSTL) and Supply Catalogs/Supply Manuals (SC/SM).	**DATE**
TO *(Forward to proponent of publication or form) (Include ZIP Code)* U.S. Army TACOM Life Cycle Management Command ATTN: AMSTA-LCL-MPP/TECH PUBS 6501 E. 11 Mile Road, Warren, MI 48397-5000	**FROM** *(Activity and location) (Include ZIP Code)*	

PART I – ALL PUBLICATIONS (EXCEPT RPSTL AND SC/SM) AND BLANK FORMS

PUBLICATION/FORM NUMBER	DATE	TITLE
TM 9-2330-392-13&P	07 December 2012	Cargo Trailer M1101, M1102, Trailer Chassis

ITEM	PAGE	PARA-GRAPH	LINE	FIGURE NO.	TABLE	RECOMMENDED CHANGES AND REASON

TYPED NAME, GRADE OR TITLE	TELEPHONE EXCHANGE/AUTOVON, PLUS EXTENSION	SIGNATURE

TO *(Forward direct to addressee listed in publication)*	**FROM** *(Activity and location) (Include ZIP Code)*	**DATE**
U.S. Army TACOM Life Cycle Management Command ATTN: AMSTA-LCL-MPP/TECH PUBS 6501 E. 11 Mile Road, Warren, MI 48397-5000		

PART II – REPAIR PARTS AND SPECIAL TOOL LISTS AND SUPPLY CATALOGS/SUPPLY MANUALS

PUBLICATION/FORM NUMBER	DATE	TITLE
TM 9-2330-392-13&P	07 December 2012	Cargo Trailer M1101, M1102, Trailer Chassis

PAGE NO.	COLM NO.	LINE NO.	NATIONAL STOCK NUMBER	REFERENCE NO.	FIGURE NO.	ITEM NO.	TOTAL NO. OF MAJOR ITEMS SUPPORTED	RECOMMENDED ACTION

PART III – REMARKS *(Any general remarks, recommendations, or suggestions for improvement of publications and blank forms. Additional blank sheets may be used if more space is needed.)*

TYPED NAME, GRADE OR TITLE	TELEPHONE EXCHANGE/AUTOVON, PLUS EXTENSION	SIGNATURE

APD V4.00

RECOMMENDED CHANGES TO PUBLICATIONS AND BLANK FORMS For use of this form, see AR 25-30; the proponent agency is OAASA	Use Part II *(reverse)* for Repair Parts and Special Tool Lists (RPSTL) and Supply Catalogs/Supply Manuals (SC/SM).	**DATE**
TO *(Forward to proponent of publication or form) (Include ZIP Code)* U.S. Army TACOM Life Cycle Management Command ATTN: AMSTA-LCL-MPP/TECH PUBS 6501 E. 11 Mile Road, Warren, MI 48397-5000	**FROM** *(Activity and location) (Include ZIP Code)*	

PART I – ALL PUBLICATIONS (EXCEPT RPSTL AND SC/SM) AND BLANK FORMS

PUBLICATION/FORM NUMBER	DATE	TITLE
TM 9-2330-392-13&P	07 December 2012	Cargo Trailer M1101, M1102, Trailer Chassis

ITEM	PAGE	PARA-GRAPH	LINE	FIGURE NO.	TABLE	RECOMMENDED CHANGES AND REASON

TYPED NAME, GRADE OR TITLE	TELEPHONE EXCHANGE/AUTOVON, PLUS EXTENSION	SIGNATURE

TO *(Forward direct to addressee listed in publication)*	**FROM** *(Activity and location) (Include ZIP Code)*	**DATE**
U.S. Army TACOM Life Cycle Management Command ATTN: AMSTA-LCL-MPP/TECH PUBS 6501 E. 11 Mile Road, Warren, MI 48397-5000		

PART II – REPAIR PARTS AND SPECIAL TOOL LISTS AND SUPPLY CATALOGS/SUPPLY MANUALS

PUBLICATION/FORM NUMBER	DATE	TITLE
TM 9-2330-392-13&P	07 December 2012	Cargo Trailer M1101, M1102, Trailer Chassis

PAGE NO.	COLM NO.	LINE NO.	NATIONAL STOCK NUMBER	REFERENCE NO.	FIGURE NO.	ITEM NO.	TOTAL NO. OF MAJOR ITEMS SUPPORTED	RECOMMENDED ACTION

PART III – REMARKS *(Any general remarks, recommendations, or suggestions for improvement of publications and blank forms. Additional blank sheets may be used if more space is needed.)*

TYPED NAME, GRADE OR TITLE	TELEPHONE EXCHANGE/AUTOVON, PLUS EXTENSION	SIGNATURE

APD V4.00

By Order of the Secretary of the Army:

RAYMOND T. ODIERNO
General, United States Army
Chief of Staff

Official:

JOYCE E. MORROW
Administrative Assistant to the
Secretary of the Army
1229906

By Order of the Secretary of the Air Force:

JANET C. WOLFENBARGER
General, United States Air Force
Commander, AFMC

MARK A. WELSH, III
General, United States Air Force
Chief of Staff

Distribution:

To be distributed in accordance with the initial distribution number (IDN) 391014 requirements for TM 9-2330-392-13&P.

THE METRIC SYSTEM AND EQUIVALENTS

Linear Measure

1 Centimeter = 10 Millimeters = 0.01 Meters = 0.3937 Inches
1 Meter = 100 Centimeters = 1000 Millimeters = 39.37 Inches
1 Kilometer = 1000 Meters = 0.621 Miles

Weights

1 Gram = 0.001 Kilograms = 1000 Milligrams = 0.035 Ounces
1 Kilogram = 1000 Grams = 2.2 Pounds
1 Metric Ton = 1000 Kilograms = 1 Megagram = 1.1 Short Tons

Liquid Measure

1 Milliliter = 0.001 Liters = 0.0338 Fluid Ounces
1 Liter = 1000 Milliliters = 33.82 Fluid Ounces

Square Measure

1 Sq Centimeter = 100 Sq Millimeters = 0.155 Sq Inches
1 Sq Meter = 10,000 Sq Centimeters = 10.76 Sq Feet
1 Sq Kilometer = 1,000,000 Sq Meters = 0.0386 Sq Miles

Cubic Measure

1 Cu Centimeter = 1,000 Cu Millimeters = 0.06 Cu Inches
1 Cu Meter = 1,000,000 Cu Centimeters = 35.31 Cu Feet

Temperature

9/5 C° +32 = F°
5/9 (°F - 32) = °C
212° Fahrenheit is equivalent to 100° Celsius
90° Fahrenheit is equivalent to 32.2° Celsius
32° Fahrenheit is equivalent to 0° Celsius

APPROXIMATE CONVERSION FACTORS

To Change	To	Multiply By
Inches	Centimeters	2.540
Feet	Meters	0.305
Yards	Meters	0.914
Miles	Kilometers	1.609
Sq Inches	Sq Centimeters	6.451
Sq Feet	Sq Meters	0.093
Sq Yards	Sq Meters	0.836
Sq Miles	Sq Kilometers	2.590
Acres	Sq Hectometers	0.405
Cubic Feet	Cubic Meters	0.028
Cubic Yards	Cubic Meters	0.765
Fluid Ounces	Milliliters	29.573
Pints	Liters	0.473
Quarts	Liters	0.946
Gallons	Liters	3.785
Ounces	Grams	28.349
Pounds	Kilograms	0.454
Short Tons	Metric Tons	0.907
Pound-Feet	Newton-Meters	1.356
Pounds per Sq Inch	Kilopascals	6.895
Miles per Gallon	Kilometers per Liter	0.425
Miles per Hour	Kilometers per Hour	1.609

To Change	To	Multiply By
Centimeters	Inches	0.394
Meters	Feet	3.280
Meters	Yards	1.094
Kilometers	Miles	0.621
Sq Centimeters	Sq Inches	0.155
Sq Meters	Sq Feet	10.764
Sq Meters	Sq Yards	1.196
Sq Kilometers	Sq Miles	0.386
Sq Hectometers	Acres	2.471
Cubic Meters	Cubic Feet	35.315
Cubic Meters	Cubic Yards	1.308
Milliliters	Fluid Ounces	0.034
Liters	Pints	2.113
Liters	Quarts	1.057
Liters	Gallons	0.264
Grams	Ounces	0.035
Kilograms	Pounds	2.205
Metric Tons	Short Tons	1.102
Newton-Meters	Pound-Feet	0.738
Kilopascals	Pounds per Sq Inch	0.145
Kilometers per Liter	Miles per Gallon	2.354
Kilometers per Hour	Miles per Hour	0.621